chanhvinh.com

Lateral Plungers • with thread, without seal

EH 22150.



Product Description

To be used for positioning and applying pressure, e.g. during painting and sandblasting.

Material

Body
- Steel, zinc-plated by galvanization

Spring
- Stainless steel
- Steel, blackened
- Steel, zinc-plated by galvanization

Pin
- Steel, case-hardened, zinc-plated by galvanization
- Thermoplastic POM, white

Assembly

Lateral plungers are installed by screwing in by means of a mounting tool.
Formula for calculating the center distance for the mounting hole:
$l_0 = z/2 + w + x$,
l_0 = center distance,
y = workpiece height,
w = workpiece length,
x = coordinate dimension,
s = stroke,
z = stop diameter
Calculation dimension x:
y greater than or equal to $l_2 - d_2/2$,
then $x = d_2/2 - s$
(value x for this case see table)
or
y smaller than $l_2 - d_2/2$,
then $x = d_2/2 - s - [(l_2 - d_2/2 - y) * 0{,}123]$

Characteristic

Version light spring load = spring from stainless steel
Version standard spring load = spring from steel, blackened
Version heavy spring load = spring from steel, zinc-plated by galvanization

Drawing

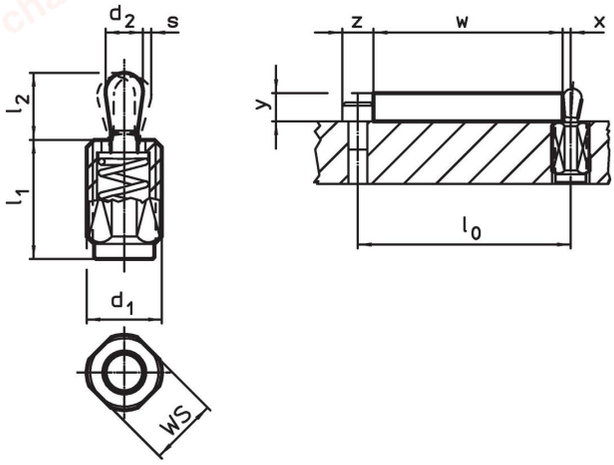

chanhvinh.com

Order information

Dimensions					Stroke	WS	x[1]			Art. No.
d_1	l_1 -2	Spring load F max. [2] ~	d_2	l_2	s			max.		
[mm]		[N]	[mm]		[mm]	[mm]	[mm]	[°C]	[g]	
Pin: Steel/Light spring load										
M12	**11.5**	**20**	5	6.4	0.8	10	1.7	250	4.0	22150.0310
M12	**19.0**	**20**	5	6.4	0.8	10	1.7	250	5.9	22150.0314
M12	**26.5**	**20**	5	6.4	0.8	10	1.7	250	7.9	22150.0318
M12	**11.5**	**40**	6	10.4	1.0	10	2.0	250	4.8	22150.0330
M12	**19.0**	**40**	6	10.4	1.0	10	2.0	250	6.6	22150.0334
M12	**26.5**	**40**	6	10.4	1.0	10	2.0	250	8.6	22150.0338
M18 x 1,5	**18.0**	**100**	10	16.9	1.6	16	3.4	250	19.0	22150.0350
M18 x 1,5	**31.5**	**100**	10	16.9	1.6	16	3.4	250	28.0	22150.0354
M18 x 1,5	**45.0**	**100**	10	16.9	1.6	16	3.4	250	36.0	22150.0358
Pin: Steel/Standard spring load										
M12	**11.5**	**50**	5	6.4	0.8	10	1.7	250	4.1	22150.0311
M12	**19.0**	**50**	5	6.4	0.8	10	1.7	250	6.4	22150.0315
M12	**26.5**	**50**	5	6.4	0.8	10	1.7	250	8.3	22150.0319
M12	**11.5**	**75**	6	10.4	1.0	10	2.0	250	4.9	22150.0331
M12	**19.0**	**75**	6	10.4	1.0	10	2.0	250	7.1	22150.0335
M12	**26.5**	**75**	6	10.4	1.0	10	2.0	250	9.6	22150.0339
M18 x 1,5	**18.0**	**150**	10	16.9	1.6	16	3.4	250	20.0	22150.0351
M18 x 1,5	**31.5**	**150**	10	16.9	1.6	16	3.4	250	29.0	22150.0355
M18 x 1,5	**45.0**	**150**	10	16.9	1.6	16	3.4	250	39.0	22150.0359
Pin: Steel/Heavy spring load										
M12	**11.5**	**100**	5	6.4	0.8	10	1.7	250	4.4	22150.0312
M12	**19.0**	**100**	5	6.4	0.8	10	1.7	250	6.9	22150.0316
M12	**26.5**	**100**	5	6.4	0.8	10	1.7	250	9.0	22150.0320
M12	**11.5**	**100**	6	10.4	1.0	10	2.0	250	5.4	22150.0332
M12	**19.0**	**100**	6	10.4	1.0	10	2.0	250	7.7	22150.0336
M12	**26.5**	**100**	6	10.4	1.0	10	2.0	250	10.0	22150.0340
M18 x 1,5	**18.0**	**200**	10	16.9	1.6	16	3.4	250	21.0	22150.0352
M18 x 1,5	**31.5**	**200**	10	16.9	1.6	16	3.4	250	30.0	22150.0356
M18 x 1,5	**45.0**	**200**	10	16.9	1.6	16	3.4	250	40.0	22150.0360
Pin: Thermoplastic/Light spring load										
M12	**11.5**	**20**	5	6.4	0.8	10	1.7	80	2.7	22150.0370
M12	**19.0**	**20**	5	6.4	0.8	10	1.7	80	4.6	22150.0375
M12	**26.5**	**20**	5	6.4	0.8	10	1.7	80	6.5	22150.0383
M12	**11.5**	**40**	6	10.4	1.0	10	2.0	80	3.1	22150.0373
M12	**19.0**	**40**	6	10.4	1.0	10	2.0	80	4.8	22150.0380
M12	**26.5**	**40**	6	10.4	1.0	10	2.0	80	6.8	22150.0385
M18 x 1,5	**18.0**	**100**	10	16.9	1.6	16	3.4	80	12.0	22150.0390
M18 x 1,5	**31.5**	**100**	10	16.9	1.6	16	3.4	80	20.0	22150.0393
M18 x 1,5	**45.0**	**100**	10	16.9	1.6	16	3.4	80	30.0	22150.0395

[1] If the workpiece height (y) is less than l2-d2/2, the coordinate dimension (x) must be calculated.

[2] statistical average value

Accessories

	Dimensions d_1 [mm]	[g]	Art. No.
assembly tool			
	**M12**	76	22150.0820
	M18 x 1,5	137	22150.0822

chanhvinh.com

Application example

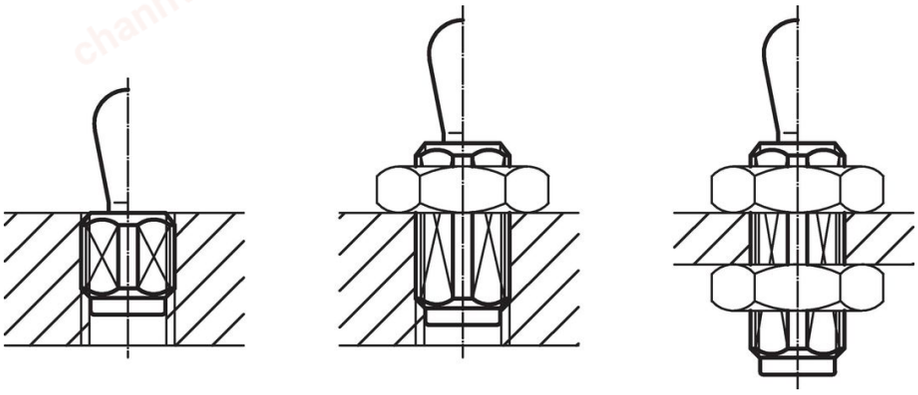

Compliance

For detailed compliance information please select the desired article number.