chanhvinh.com

Lateral Plungers • smooth, without seal

EH 22150.



Product Description

To be used for positioning and applying pressure, e.g. during painting and sandblasting.

Material

Body
- Aluminium Al

Spring
- Stainless steel
- Steel, blackened
- Steel, zinc-plated by galvanization

Pin
- Steel, case-hardened, zinc-plated by galvanization
- Thermoplastic POM, white

Assembly

Installation by pressing in.
Formula for calculating the center distance for the mounting hole:
l_0 = z/2 + w + x,
l_0 = center distance,
y = workpiece height,
w = workpiece length,
x = coordinate dimension,
s = stroke,
z = stop diameter
Calculation dimension x:
y greater than or equal to l_2 - d_2/2,
then x = d_2/2 - s
(value x for this case see table)
or
y smaller than l_2 - d_2/2,
then x = d_2/2 - s - [(l_2 - d_2/2 - y) * 0,123]

Characteristic

Version light spring load = spring from stainless steel
Version standard spring load = spring from steel, blackened
Version heavy spring load = spring from steel, zinc-plated by galvanization

More information

Further products

- Eccentric Mounting Bushings, for lateral plungers, smooth

Drawing

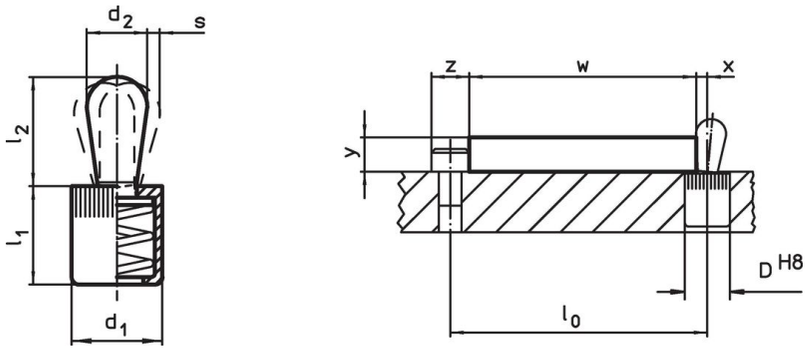

chanhvinh.com

chanhvinh.com

Order information

Dimensions d_1 [mm]	Dimensions d_2 [mm]	Spring load F max. [1] ~ [N]	Dimensions l_1 -1 [mm]	Dimensions l_2 ±0.5 [mm]	Stroke s [mm]	Location hole D H8 [mm]	x [2] [mm]	max. [°C]	[g]	Art. No.
Pin: Steel/pin from steel, light spring load										
6	**3**	**10**	7.0	4.0	0.5	6	1.0	250	2.8	**22150.0010**
10	**5**	**20**	11.0	6.7	0.8	10	1.7	250	2.6	**22150.0020**
10	**6**	**40**	11.0	10.7	1.0	10	1.9	250	3.4	**22150.0025**
12	**8**	**50**	13.5	13.6	1.3	12	2.7	250	6.8	**22150.0030**
16	**10**	**100**	18.0	16.7	1.6	16	3.1	250	14.0	**22150.0040**
Pin: Steel/pin from steel, standard spring load										
6	**3**	**20**	7.0	4.0	0.5	6	1.0	250	0.6	**22150.0011**
10	**5**	**50**	11.0	6.7	0.8	10	1.7	250	2.8	**22150.0021**
10	**6**	**75**	11.0	10.7	1.0	10	1.9	250	3.6	**22150.0026**
12	**8**	**100**	13.5	13.6	1.3	12	2.7	250	7.3	**22150.0031**
16	**10**	**150**	18.0	16.7	1.6	16	3.1	250	15.0	**22150.0041**
Pin: Steel/pin from steel, heavy spring load										
6	**3**	**40**	7.0	4.0	0.5	6	1.0	250	0.7	**22150.0012**
10	**5**	**100**	11.0	6.7	0.8	10	1.7	250	3.0	**22150.0022**
10	**6**	**100**	11.0	10.7	1.0	10	1.9	250	3.9	**22150.0027**
12	**8**	**150**	13.5	13.6	1.3	12	2.7	250	7.8	**22150.0032**
16	**10**	**200**	18.0	16.7	1.6	16	3.1	250	15.0	**22150.0042**
Pin: Thermoplastic/pin from thermoplastic, light spring load										
6	**3**	**10**	7.0	4.0	0.5	6	1.0	80	0.3	**22150.0050**
10	**5**	**20**	11.0	6.7	0.8	10	1.7	80	1.3	**22150.0060**
10	**6**	**40**	11.0	10.7	1.0	10	1.9	80	1.5	**22150.0062**
12	**8**	**50**	13.5	13.9	1.3	12	2.7	80	2.9	**22150.0070**
16	**10**	**100**	18.0	16.7	1.6	16	3.1	80	6.6	**22150.0080**

[1] statistical average value

[2] If the workpiece height (y) is less than l2-d2/2, the coordinate dimension (x) must be calculated.

Accessories

	Dimensions d_1 [mm]	[g]	Art. No.
assembly tool			
	**6**	19	**22150.0830**
	10	49	**22150.0831**
	12	86	**22150.0832**
	16	105	**22150.0833**

Application example

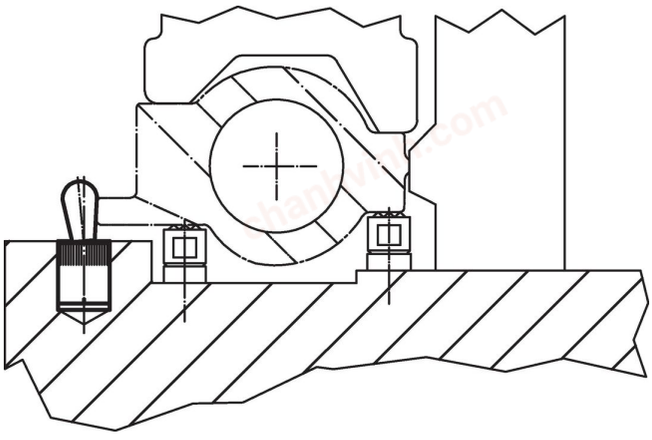

chanhvinh.com

Compliance

For detailed compliance information please select the desired article number.

chanhvinh.com