chanhvinh.com

Lateral Spring Plungers

EH 22140.



Product Description

To be used for positioning and applying pressure, e.g. during painting and sandblasting.

Material

Ball
- Stainless steel, hardened
- Thermoplastic POM, white
- Ball-bearing steel, hardened

Body
- Free cutting steel, blackened

Spring
- Stainless steel
- Plastic (PU)

Assembly

Insertion bore l_3 to be considered.

More information

Notes

Customized design on request.

Drawing

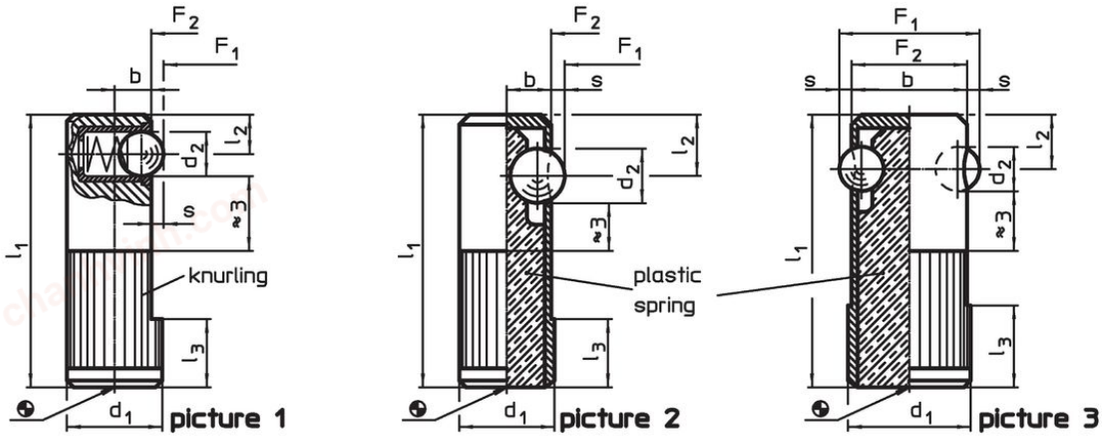

Order information

Dimensions d_1 +0.1 [mm]	d_2 [mm]	l_1 [mm]	l_2 [mm]	l_3 [mm]	b [mm]	Location hole H8 [mm]	Stroke s [mm]	Spring load[1] F_1 ~ [N]	F_2 ~ [N]	min. [°C]	max. [°C]	[g]	Art. No.
ball from stainless steel, standard spring load, one-sided – picture 1													
8	3.0	25	3.6	6	3.2	8	0.8	2.5	6.5	-30	50	8.8	22140.0008
10	4.0	30	4.2	7	4.0	10	1.0	4.5	9.0	-30	50	16.0	22140.0010
12	5.0	35	4.8	9	5.0	12	1.6	6.5	13.0	-30	50	28.0	22140.0012
14	6.5	40	5.8	10	5.4	14	1.9	8.0	18.0	-30	50	43.0	22140.0014
ball from thermoplastic, standard spring load, one-sided – picture 1													
8	3.0	25	3.6	6	3.2	8	0.8	2.5	6.5	-30	50	8.7	22140.0108
10	4.0	30	4.2	7	4.0	10	1.0	4.5	9.0	-30	50	16.0	22140.0110
12	5.0	35	4.8	9	5.0	12	1.6	6.5	13.0	-30	50	28.0	22140.0112
14	6.5	40	5.8	10	5.4	14	1.9	8.0	18.0	-30	50	42.0	22140.0114
ball from ball-bearing steel, heavy spring load, one-sided – picture 2													
10	5.5	30	7.0	8	4.5	10	1.0	60.0	170.0	-40	80	8.5	22140.0410
12	6.5	35	8.0	9	5.5	12	1.5	80.0	260.0	-40	80	14.0	22140.0412
14	8.0	40	9.0	10	6.5	14	2.0	120.0	480.0	-40	80	20.0	22140.0414
ball from ball-bearing steel, heavy spring load, on both sides – picture 3													
16	5.5	35	7.0	11	15.0	16	1.5	110.0	220.0	-40	80	20.0	22140.0616
18	6.5	40	8.0	12	17.0	18	1.8	120.0	330.0	-40	80	29.0	22140.0618
22	8.0	45	9.0	15	21.0	22	2.5	130.0	540.0	-40	80	43.0	22140.0622

[1] statistical average value

chanhvinh.com

Application example

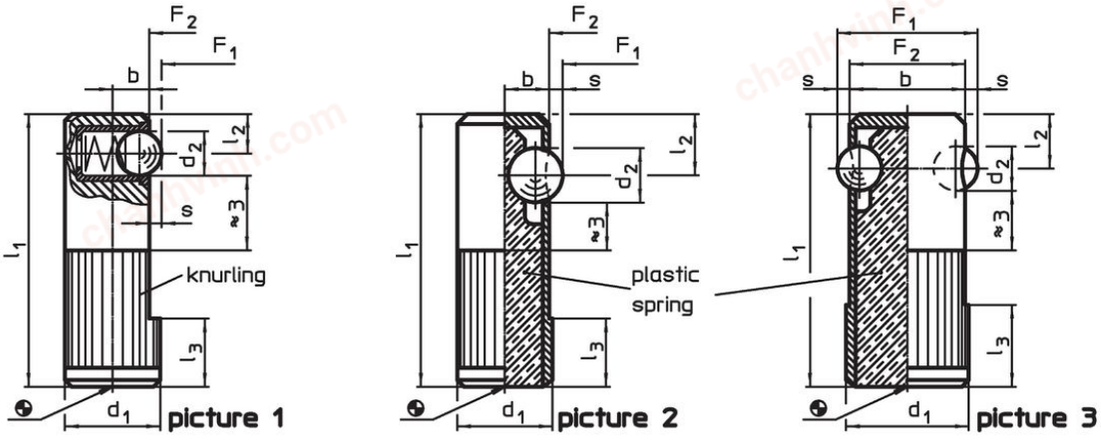

Compliance

For detailed compliance information please select the desired article number.