chanhvinh.com

Index Plungers • pneumatical
EH 22124.



CE

Product Description

Index plungers are used in indexing bores and serve for secure locking and precise positioning. Components can be reliably positioned or released without the use of additional tools. This enables fast, repeatable positioning and ensures a high level of process reliability.
Index plungers are used wherever components need to be positioned or locked quickly, safely and precisely. Typical applications include mechanical and plant engineering, fixture and tool construction, as well as assembly and production technology. They also ensure smooth operation in transport and packaging systems.
The index plunger is equipped with a pneumatic actuation unit that moves the plunger pin into the indexing position and/or retracts it. Optionally, the position of the plunger pin can be monitored by means of an electronic sensor.
Depending on the version, the locking pin is extended and retracted pneumatically or actuated by a combination of pneumatic pressure and spring force.
In the event of a pressure drop, the locking pin of the single-acting versions automatically returns to its defined initial position by spring force.
These index plungers are characterized by the following features:
- Pneumatic actuation for engaging and/or disengaging the locking pin
- Suitable for automated indexing and positioning processes as well as installations with limited accessibility
- Optional integrated electronic sensor for position monitoring
- Can be integrated into control systems (e.g. via IO-Link)
- High repeatability due to defined actuation
- Robust design, suitable for demanding operating environments
- Available in different operating principles (single-acting and double-acting versions)

Material

Body
- Stainless steel 1.4305

Locking pin
- Stainless steel 1.4305, nickel-plated

Cable
- Thermoplastic PUR, black

Magnet
- Permanent magnet

Sensor
- Thermoplastic PA 6, black, dull

Lock nut
- Stainless steel A2 (ISO 8675)

Spring
- Stainless steel

Assembly

The sensor and sensor clip are supplied loose and can be mounted using the hex key provided. The cable outlet direction can be selected individually during installation.
1. Slide the sensor laterally into the sensor clip.
2. Tighten the sensor set screw by hand (max. 0.1 Nm).
3. Clip the sensor clip into the annular groove of the index plunger in the desired position.
4. Rotate the sensor clip to adjust the cable outlet direction as required.
5. During commissioning, teach the sensor to the end positions using the operating element or via IO-Link in accordance with the operating instructions supplied with the sensor.

Note:
To avoid malfunctions, magnetic fields should not affect the index plunger.

More information

Notes

Please note the pneumatic and electric specifications of the sensor. A corresponding PDF document is available for download under "Documents".

Further products

- Index Plungers, with sensor

chanhvinh.com

Drawing

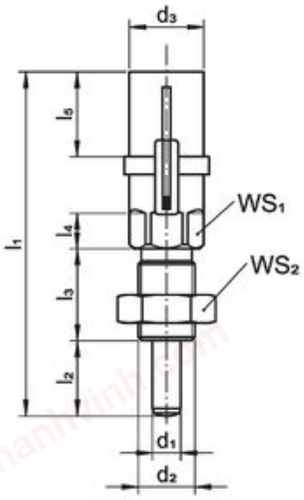

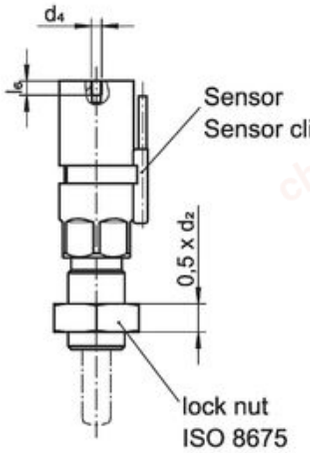



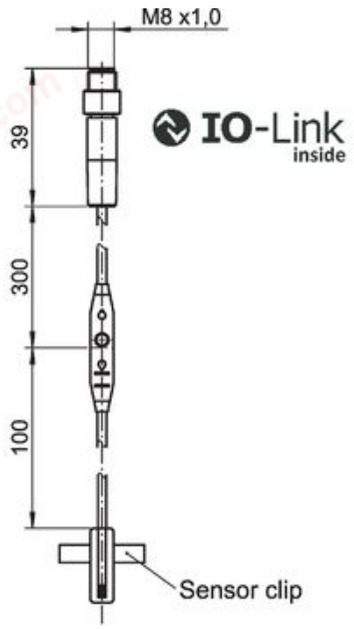

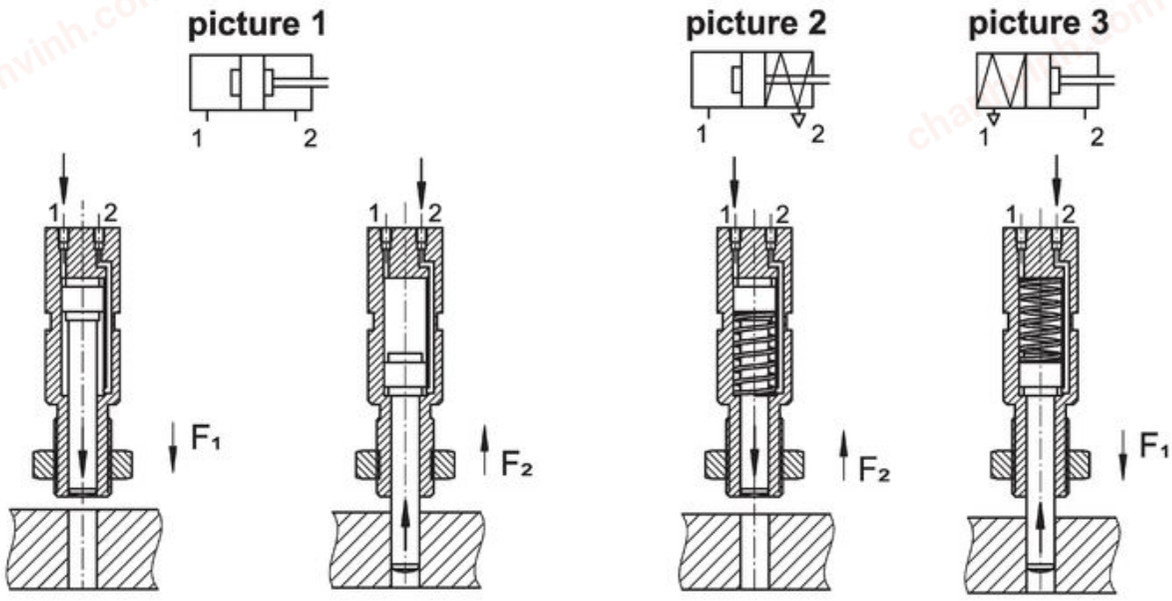

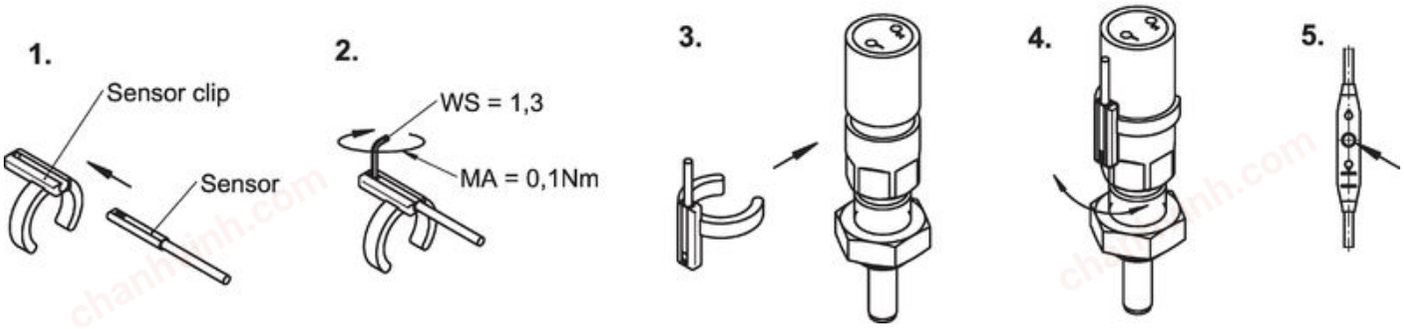

chanhvinh.com

Order information

Dimensions										WS1	WS2	Spring load[1]		Force					Art. No.
d1 -0.02 -0.05	d2	l2	d3	d4	l1	l3	l4	l5	l6 min.			F1 ~	F2 ~	F1 at 6 bar ~	F2 at 6 bar ~	min.	max.		
[mm]										[mm]	[mm]	[N]		[N]		[°C]		[g]	
double-acting – picture 1																			
6	**M12 x 1,5**	9	21	M3	73	22	10	24	4	19	18	–	–	65	50	-20	75	154	22124.0106
8	**M16 x 1,5**	12	21	M3	76	26	10	24	4	19	24	–	–	65	50	-20	75	181	22124.0108
10	**M16 x 1,5**	12	21	M3	76	26	10	24	4	19	24	–	–	65	50	-20	75	154	22124.0110
12	**M20 x 1,5**	15	21	M3	76	34	10	24	4	19	30	–	–	65	50	-20	75	154	22124.0112
single-acting, bolt retracted by spring force – picture 2																			
6	**M12 x 1,5**	9	21	M3	73	22	10	24	4	19	18	26	12	–	–	-20	75	154	22124.0006
8	**M16 x 1,5**	12	21	M3	76	26	10	24	4	19	24	26	12	–	–	-20	75	154	22124.0008
10	**M16 x 1,5**	12	21	M3	76	26	10	24	4	19	24	26	12	–	–	-20	75	159	22124.0010
12	**M20 x 1,5**	15	21	M3	76	34	10	24	4	19	30	26	12	–	–	-20	75	185	22124.0012
Single-acting, bolt moved into the indexing position by spring force – picture 3																			
6	**M12 x 1,5**	9	21	M3	73	22	10	24	4	19	18	12	26	–	–	-20	75	154	22124.0206
8	**M16 x 1,5**	12	21	M3	76	26	10	24	4	19	24	12	26	–	–	-20	75	154	22124.0208
10	**M16 x 1,5**	12	21	M3	76	26	10	24	4	19	24	12	26	–	–	-20	75	154	22124.0210
12	**M20 x 1,5**	15	21	M3	76	34	10	24	4	19	30	12	26	–	–	-20	75	185	22124.0212
double-acting, with sensor – picture 1																			
6	**M12 x 1,5**	9	21	M3	73	22	10	24	4	19	18	–	–	65	50	-20	75	221	22124.1106
8	**M16 x 1,5**	12	21	M3	76	26	10	24	4	19	24	–	–	65	50	-20	75	219	22124.1108
10	**M16 x 1,5**	12	21	M3	76	26	10	24	4	19	24	–	–	65	50	-20	75	221	22124.1110
12	**M20 x 1,5**	15	21	M3	76	34	10	24	4	19	30	–	–	65	50	-20	75	258	22124.1112
single-acting, bolt retracted by spring force, with sensor – picture 2																			
6	**M12 x 1,5**	9	21	M3	73	22	10	24	4	19	18	26	12	–	–	-20	75	195	22124.1006
8	**M16 x 1,5**	12	21	M3	76	26	10	24	4	19	24	26	12	–	–	-20	75	219	22124.1008
10	**M16 x 1,5**	12	21	M3	76	26	10	24	4	19	24	26	12	–	–	-20	75	195	22124.1010
12	**M20 x 1,5**	15	21	M3	76	34	10	24	4	19	30	26	12	–	–	-20	75	255	22124.1012
single-acting, bolt moved into the indexing position by spring force, with sensor – picture 3																			
6	**M12 x 1,5**	9	21	M3	73	22	10	24	4	19	18	12	26	–	–	-20	75	195	22124.1206
8	**M16 x 1,5**	12	21	M3	76	26	10	24	4	19	24	12	26	–	–	-20	75	217	22124.1208
10	**M16 x 1,5**	12	21	M3	76	26	10	24	4	19	24	12	26	–	–	-20	75	258	22124.1210
12	**M20 x 1,5**	15	21	M3	76	34	10	24	4	19	30	12	26	–	–	-20	75	219	22124.1212

[1] statistical average value

Application example

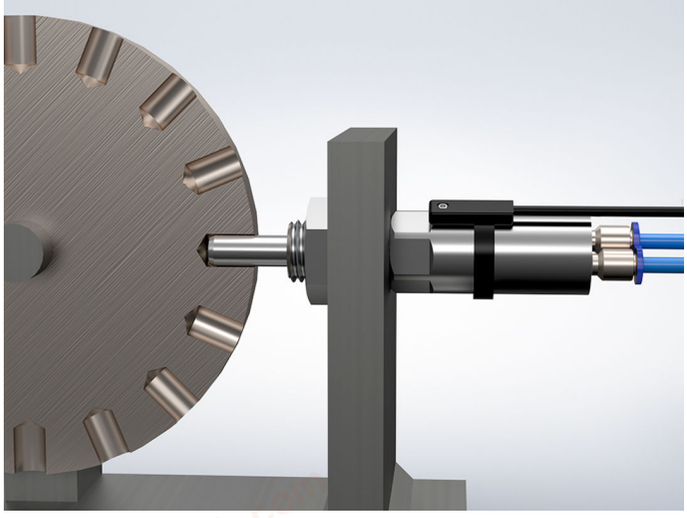



chanhvinh.com



Compliance

RoHS-compliant
Compliant with Directive 2011/65/EU [RoHS].

Does not contain SVHC substances
No SVHC substances with more than 0.1% w/w contained - SVHC list [REACH] as of 04.02.2026.

SCIP-code
N/A

Does not contain Proposition 65 substances
No Proposition 65 substances included.
https://www.P65Warnings.ca.gov/

Free from Conflict Minerals

POP-compliant
Contains no persistent organic pollutants – Stockholm Convention [POP] as of September 2025.

PFAS-compliant
Contains no per- and polyfluoroalkyl substances (PFAS).

TSCA-compliant
Agent concentration in this product does not exceed the specified threshold.