chanhvinh.com

Index Plungers • with sensor
EH 22123.



Product Description

Index plungers are used in indexing bores and serve for secure locking and precise positioning. Components can be reliably positioned or released without the use of additional tools. This enables fast, repeatable positioning and ensures a high level of process reliability.
Index plungers are used wherever components need to be positioned or locked quickly, safely and precisely. Typical applications include mechanical and plant engineering, fixture and tool construction, as well as assembly and production technology. They also ensure smooth operation in transport and packaging systems.
The index plunger with sensor makes it possible to monitor the indexing position of the indexing plunger. When it engages, the sensor already switches after 2/3 of the indexing distance l_2. In addition to the electronic signal, the switching status is indicated directly on the sensor via an LED.

Material

Body
- Stainless steel 1.4305

Locking pin
- Stainless steel 1.4305, nickel-plated

Knob
- Thermoplastic PA 6, black, dull

Cable
- Thermoplastic PUR, black

Magnet
- Permanent magnet

Sensor
- Thermoplastic PA 6, black, dull

Lock nut
- Stainless steel A2 (ISO 8675)

Assembly

The enclosed separate sensor and sensor clip can be mounted with the enclosed Allen key. The derivation direction of the sensor cable can be determined individually.
1. Push the sensor into the side of the sensor clip.
2. Tighten the internal hexagon screw of the sensor with light hand force (max. 0.1 Nm).
3. Clip the sensor clip into the annular groove of the index plunger in any position.
4. By turning the sensor clip, the sensor cable's derivation direction can be adjusted.

Note:
To avoid interferences, no magnetic fields should act on the index plunger.

Operation

When using the locking version, the knob is pulled-out, turned 90° and secured by a notched catch (when locking pin should not overhang).

More information

Notes

Knob not removable.

Further products

- Index Plungers, pneumatical
- Retrieval Units, with sensor

chanhvinh.com

Drawing

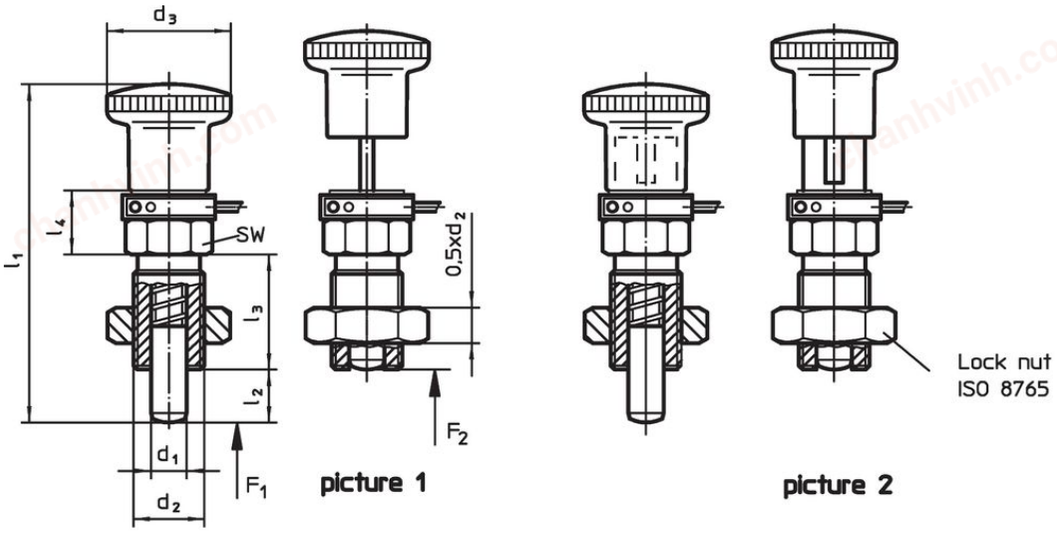

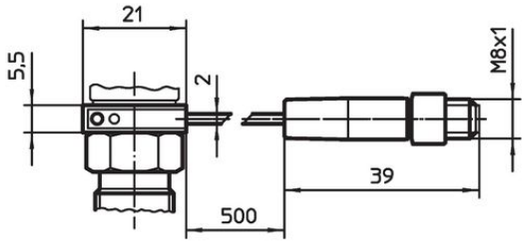

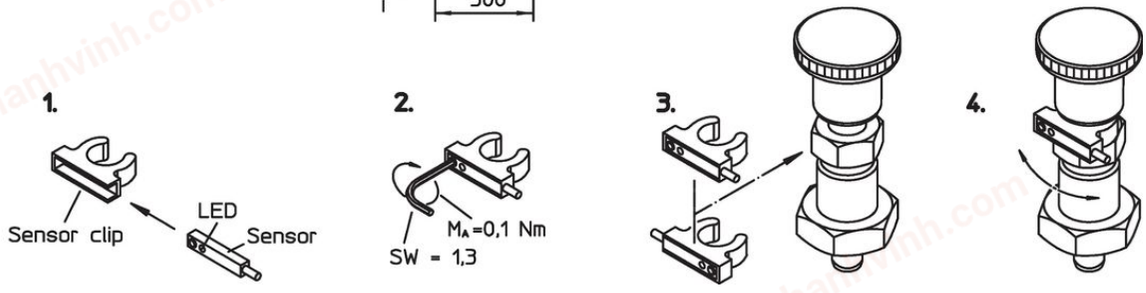

Order information

Dimensions							WS	Spring load[1]					Art. No.
d_1 -0.02 -0.05	d_2	l_2 min.	d_3	l_1	l_3	l_4		F_1	F_2	min.	max.		
[mm]							[mm]	[N]		[°C]		[g]	
with knob, without locking – picture 1													
4	**M 8 x 1**	**6**	16	41.5	16	11.5	10	4.0	12.5	-25	75	34	**22123.0004**
5	**M10 x 1**	**8**	19	46.5	18	12.5	12	5.0	18.0	-25	75	46	**22123.0005**
6	**M12 x 1,5**	**9**	23	54.5	22	12.5	14	6.0	25.0	-25	75	62	**22123.0006**
8	**M16 x 1,5**	**12**	28	64.5	26	14.5	17	8.5	28.0	-25	75	105	**22123.0008**
10	**M16 x 1,5**	**12**	28	64.5	26	14.5	17	9.5	38.0	-25	75	106	**22123.0010**
12	**M20 x 1,5**	**15**	33	78.0	33	16.5	22	11.5	40.0	-25	75	200	**22123.0012**
16	**M24 x 2**	**20**	33	85.0	38	18.5	27	13.0	54.0	-25	75	296	**22123.0016**
with knob and locking – picture 2													
4	**M 8 x 1**	**6**	16	41.5	16	11.5	10	4.0	12.5	-25	75	34	**22123.0104**
5	**M10 x 1**	**8**	19	46.5	18	12.5	12	5.0	18.0	-25	75	49	**22123.0105**
6	**M12 x 1,5**	**9**	23	54.5	22	12.5	14	6.0	25.0	-25	75	66	**22123.0106**
8	**M16 x 1,5**	**12**	28	64.5	26	14.5	17	8.5	28.0	-25	75	112	**22123.0108**
10	**M16 x 1,5**	**12**	28	64.5	26	14.5	17	9.5	38.0	-25	75	117	**22123.0110**
12	**M20 x 1,5**	**15**	33	78.0	33	16.5	22	11.5	40.0	-25	75	206	**22123.0112**
16	**M24 x 2**	**20**	33	85.0	38	18.5	27	13.0	54.0	-25	75	313	**22123.0116**

[1] statistical average value

chanhvinh.com

Application example

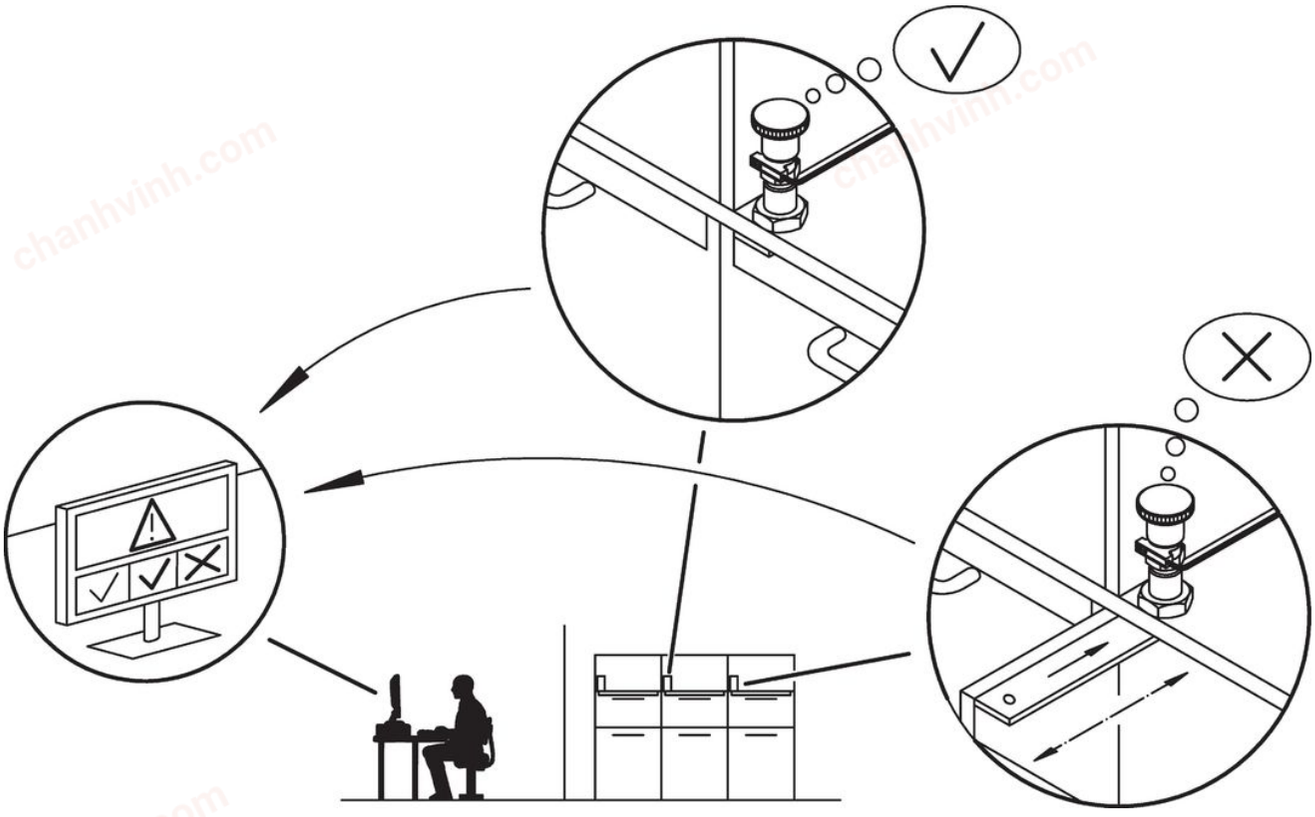

Compliance

RoHS-compliant
Compliant with Directive 2011/65/EU [RoHS].

Does not contain SVHC substances
No SVHC substances with more than 0.1% w/w contained - SVHC list [REACH] as of 04.02.2026.

SCIP-code
N/A

Does not contain Proposition 65 substances
No Proposition 65 substances included.
https://www.P65Warnings.ca.gov/

Free from Conflict Minerals

POP-compliant
Contains no persistent organic pollutants – Stockholm Convention [POP] as of September 2025.

PFAS-compliant
Contains no per- and polyfluoroalkyl substances (PFAS).

TSCA-compliant
Agent concentration in this product does not exceed the specified threshold.