chanhvinh.com

Index Plungers • with release lock

EH 22122.



Product Description

Index plungers are used in indexing bores and serve for secure locking and precise positioning. Components can be reliably positioned or released without the use of additional tools. This enables fast, repeatable positioning and ensures a high level of process reliability.
Index plungers are used wherever components need to be positioned or locked quickly, safely and precisely. Typical applications include mechanical and plant engineering, fixture and tool construction, as well as assembly and production technology. They also ensure smooth operation in transport and packaging systems.
This index plunger is equipped with a release lock.

Material

Body
- Steel, blackened
- Stainless steel 1.4305

Press button
- Thermoplastic POM, red

Locking pin
- Steel, hardened
- Stainless steel 1.4305, nickel-plated

Knob
- Thermoplastic PA 6, black-grey, matt

Assembly

The screw length can be adapted by distance collars (EH 22120.).

Operation

Actuate the red press button, and hold it in the pressed position. Only then the locking pin can be drawn in by pulling the knob.

More information

Notes

Knob not removable.
Lock nuts have to be purchased separately.

Further products

- Locating Bushings, for index bolts and index plungers
- Distance Collars, for index plungers
- Mounting Blocks, for index bolts and index plungers
- Lock nuts ISO 8675 (DIN 439), for index bolts and index plungers

Drawing

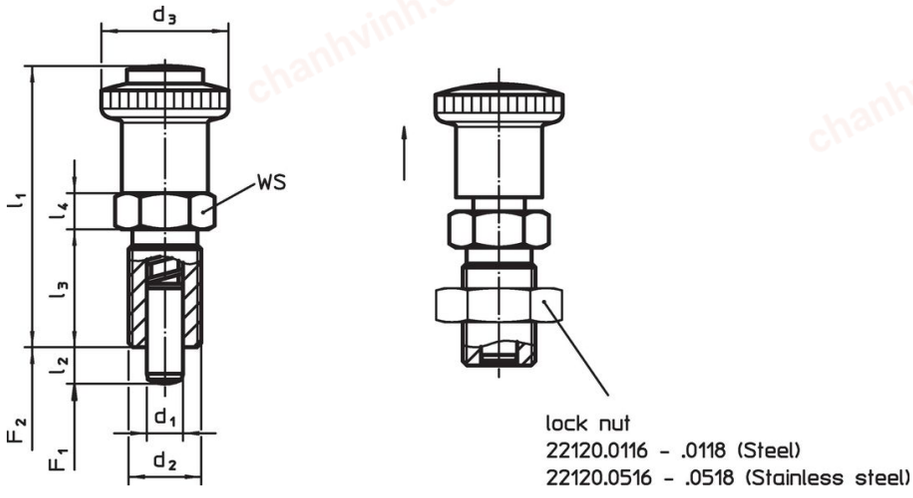

chanhvinh.com

Order information

Dimensions							WS	Spring load[1]					Art. No.
d_1 -0.02 -0.04	d_2	l_2 min.	d_3	l_1 ~	l_3	l_4		F_1 ~	F_2 ~	min.	max.		
[mm]							[mm]	[N]		[°C]		[g]	
Steel													
6	**M12 x 1,5**	**6**	28	56	22	6	19	6.5	19	-30	80	45	22122.0005
6	**M12 x 1,5**	**9**	28	56	22	6	19	6.0	25	-30	80	45	22122.0010
8	**M16 x 1,5**	**8**	28	62	26	8	19	8.5	26	-30	80	73	22122.0015
8	**M16 x 1,5**	**12**	28	62	26	8	19	8.5	28	-30	80	74	22122.0020
10	**M16 x 1,5**	**12**	28	62	26	8	19	9.5	38	-30	80	75	22122.0025
Stainless steel													
6	**M12 x 1,5**	**6**	28	56	22	6	19	6.5	19	-30	80	46	22122.0105
6	**M12 x 1,5**	**9**	28	56	22	6	19	6.0	25	-30	80	46	22122.0110
8	**M16 x 1,5**	**8**	28	62	26	8	19	8.5	26	-30	80	73	22122.0115
8	**M16 x 1,5**	**12**	28	62	26	8	19	8.5	28	-30	80	74	22122.0120
10	**M16 x 1,5**	**12**	28	62	26	8	19	9.5	38	-30	80	75	22122.0125

[1] statistical average value

Compliance

For detailed compliance information please select the desired article number.