chanhvinh.com

Index Plungers • threadless, weldable
EH 22120.



Product Description

Index plungers are used in indexing bores and serve for secure locking and precise positioning. Components can be reliably positioned or released without the use of additional tools. This enables fast, repeatable positioning and ensures a high level of process reliability.
Index plungers are used wherever components need to be positioned or locked quickly, safely and precisely. Typical applications include mechanical and plant engineering, fixture and tool construction, as well as assembly and production technology. They also ensure smooth operation in transport and packaging systems.

Material

Body
- Steel, blackened, weldable

Locking pin
- Steel, hardened

Knob
- Thermoplastic PA 6, black

Assembly

Attached by welding or glueing.

More information

Notes

Knob not removable.

Further products

- Locating Bushings, for index bolts and index plungers

Drawing

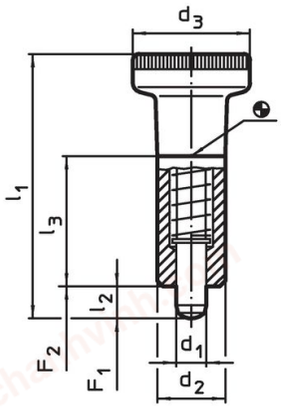

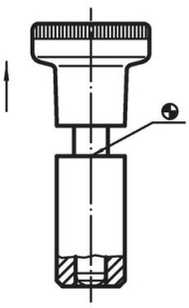

picture 1

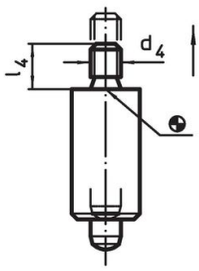

picture 2

Order information

Dimensions								Spring load[1]					Art. No.
d_1 -0.02 -0.05	d_2 h9	d_3	d_4	l_1 ~	l_2 min.	l_3	l_4	F_1 ~	F_2 ~	min.	max.		
[mm]								[N]		[°C]		[g]	
with knob – picture 1													
5	12	21	–	45.0	5	22	–	7.0	16	-30	80	25	22120.0805
6	14	25	–	54.5	6	26	–	6.5	15	-30	80	40	22120.0806
8	18	31	–	69.0	8	34	–	12.0	31	-30	80	84	22120.0808
without knob – picture 2													
5	12	–	M5	–	5	22	6	7.0	16	–	250	19	22120.0825
6	14	–	M6	–	6	26	10	6.5	15	–	250	32	22120.0826
8	18	–	M8	–	8	34	12	12.0	31	–	250	67	22120.0828

[1] statistical average value

chanhvinh.com

Application example

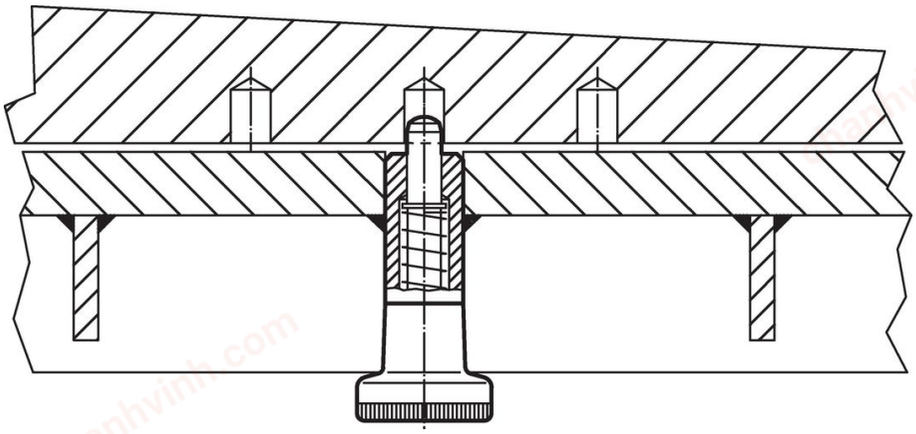

Compliance

For detailed compliance information please select the desired article number.

chanhvinh.com