chanhvinh.com

Index Plungers • without hexagon collar, stainless steel

EH 22120.



Product Description

Index plungers are used in indexing bores and serve for secure locking and precise positioning. Components can be reliably positioned or released without the use of additional tools. This enables fast, repeatable positioning and ensures a high level of process reliability.
Index plungers are used wherever components need to be positioned or locked quickly, safely and precisely. Typical applications include mechanical and plant engineering, fixture and tool construction, as well as assembly and production technology. They also ensure smooth operation in transport and packaging systems.

Material

Body
- Stainless steel 1.4305

Locking pin
- Stainless steel 1.4305, nickel-plated

Knob
- Stainless steel 1.4305

Assembly

Suitable mounting tools are available.

More information

Notes

Knob not removable.
Lock nuts have to be purchased separately.

Further products

- Mounting Blocks, for index bolts and index plungers, die-cast
- Distance Collars, for index plungers
- Lock nuts ISO 8675 (DIN 439), for index bolts and index plungers

Drawing

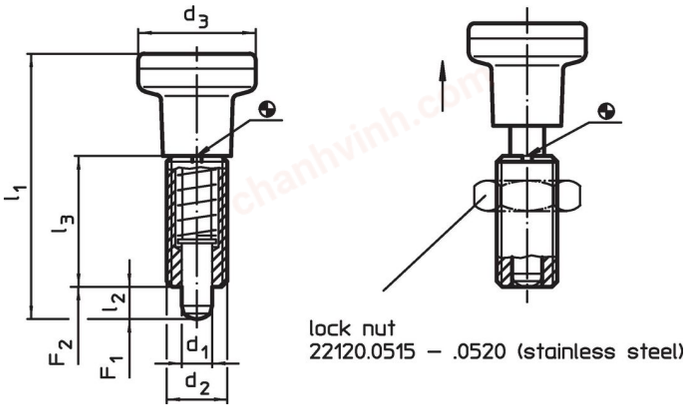

Order information

Dimensions						Spring load[1]				Art. No.
d_1 -0.02 -0.05	d_2	d_3	l_1 ~	l_2 min.	l_3	F_1 ~	F_2 ~	max.		
[mm]						[N]		[°C]	[g]	
Stainless steel										
5	M10 x 1	21	45.0	5	22	6.0	14	250	45	22120.0475
6	M12 x 1,5	25	54.5	6	26	6.5	19	250	62	22120.0476
8	M16 x 1,5	31	69.0	8	34	11.5	28	250	124	22120.0478
10	M20 x 1,5	31	80.0	10	41	23.0	54	250	165	22120.0480

[1] statistical average value

chanhvinh.com

Accessories

	Dimensions d_2 [mm]	[g]	Art. No.
assembly tool, Steel			
	**M10 x 1**	9.3	**22120.0955**
	M12 x 1,5	14.0	**22120.0956**
	M16 x 1,5	25.0	**22120.0958**
	M20 x 1,5	27.0	**22120.0960**

Compliance

For detailed compliance information please select the desired article number.