chanhvinh.com

Index Plungers • with hexagon collar, stainless steel

EH 22120.



Product Description

Index plungers are used in indexing bores and serve for secure locking and precise positioning. Components can be reliably positioned or released without the use of additional tools. This enables fast, repeatable positioning and ensures a high level of process reliability.
Index plungers are used wherever components need to be positioned or locked quickly, safely and precisely. Typical applications include mechanical and plant engineering, fixture and tool construction, as well as assembly and production technology. They also ensure smooth operation in transport and packaging systems.

Material

Body
- Stainless steel 1.4305

Locking pin
- Stainless steel 1.4305, nickel-plated

Knob
- Stainless steel 1.4305

Assembly

The screw length can be adapted by distance collars (EH 22120.).

More information

Notes

Knob not removable.
Lock nuts have to be purchased separately.

Further products

- Mounting Blocks, for index bolts and index plungers, die-cast
- Distance Collars, for index plungers
- Lock nuts ISO 8675 (DIN 439), for index bolts and index plungers

Drawing

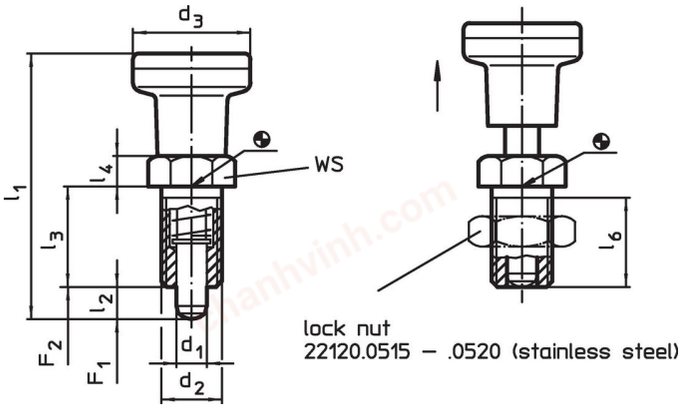

Order information

Dimensions								WS	Spring load[1]				Art. No.
d_1 -0.02 -0.05	d_2	d_3	l_1 ~	l_2 min.	l_3	l_4	l_6 min.		F_1 ~	F_2 ~	max.		
[mm]								[mm]	[N]		[°C]	[g]	
Stainless steel													
5	M10 x 1	21	45.0	5	17	5	15	12	6.0	14	250	43	22120.0485
6	M12 x 1,5	25	54.5	6	20	6	17	14	6.5	19	250	65	22120.0486
8	M16 x 1,5	31	69.0	8	26	8	23	19	11.5	28	250	132	22120.0488
10	M20 x 1,5	31	80.0	10	33	10	30	22	23.0	54	250	179	22120.0490

[1] statistical average value

chanhvinh.com

Application example

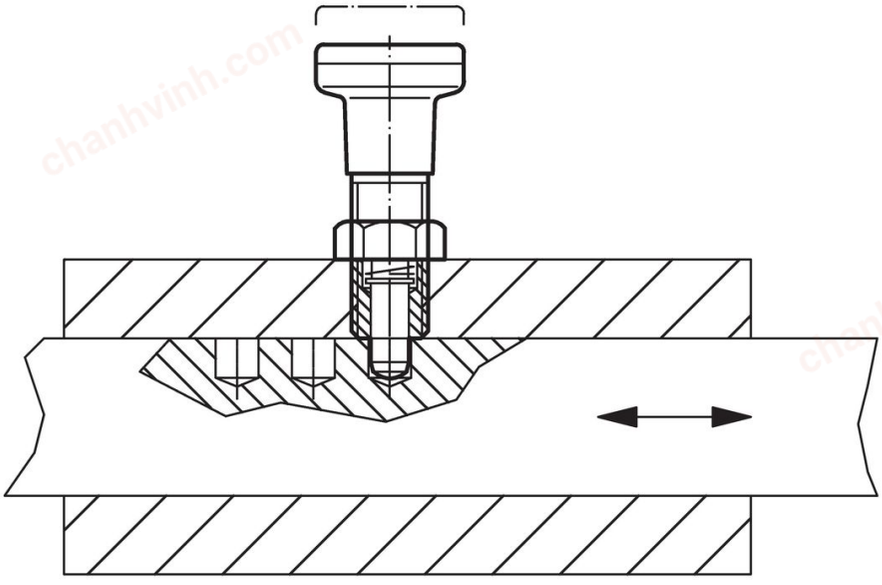

Compliance

RoHS-compliant
Compliant with Directive 2011/65/EU [RoHS].

Does not contain SVHC substances
No SVHC substances with more than 0.1% w/w contained - SVHC list [REACH] as of 04.02.2026.

SCIP-code
N/A

Does not contain Proposition 65 substances
No Proposition 65 substances included.
https://www.P65Warnings.ca.gov/

Free from Conflict Minerals
This product does not contain any substances designated as "conflict minerals" such as tantalum, tin, gold or tungsten from the Democratic Republic of Congo or adjacent countries.

POP-compliant
Contains no persistent organic pollutants – Stockholm Convention [POP] as of September 2025.

PFAS-compliant
Contains no per- and polyfluoroalkyl substances (PFAS).

TSCA-compliant
Agent concentration in this product does not exceed the specified threshold.