chanhvinh.com

Index Plungers • with hexagon collar, stainless steel A4

EH 22120.



Product Description

Index plungers are used in indexing bores and serve for secure locking and precise positioning. Components can be reliably positioned or released without the use of additional tools. This enables fast, repeatable positioning and ensures a high level of process reliability.
Index plungers are used wherever components need to be positioned or locked quickly, safely and precisely. Typical applications include mechanical and plant engineering, fixture and tool construction, as well as assembly and production technology. They also ensure smooth operation in transport and packaging systems.
The stainless steel A4 version ensures maximum corrosion resistance.

Material

Body
- Stainless steel 1.4401

Locking pin
- Stainless steel 1.4401 nickel-plated

Knob
- Thermoplastic PA 6, black-grey, matt
- Stainless steel 1.4401

Lock nut
- Stainless steel 1.4401

More information

Notes

Knob not removable.
Lock nuts have to be purchased separately.

Further products

- Lock nuts ISO 8675 (DIN 439), for index bolts and index plungers

Drawing

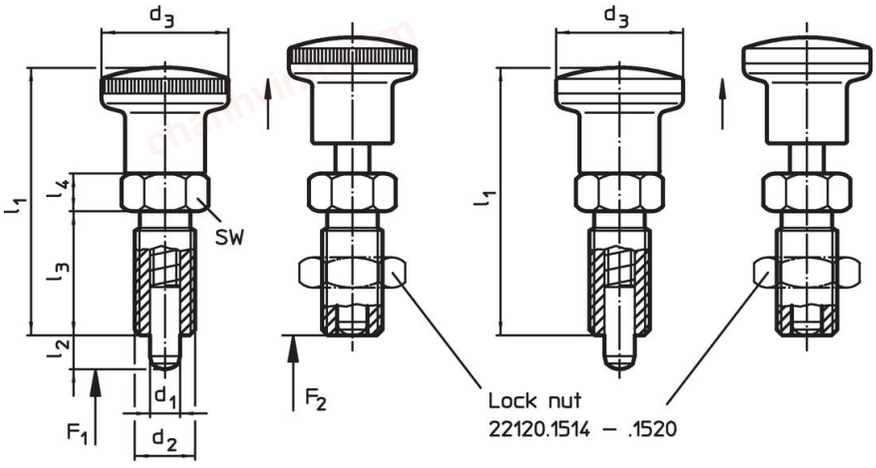

picture 1 picture 2

Order information

Dimensions							Spring load[1]				WS		Art. No.
d_1 -0.02 -0.05	d_2	l_2 min.	d_3	l_1	l_3	l_4	F_1 ~	F_2 ~	min.	max.			
[mm]							[N]		[°C]		[mm]	[g]	
with knob of thermoplastic – picture 1													
4	**M 8 x 1**	**4**	16	35.0	16	5	3.5	11	-30	80	10	10	22120.1044
4	**M 8 x 1**	**6**	16	35.0	16	5	3.0	11	-30	80	10	11	22120.1064
5	**M10 x 1**	**5**	19	40.0	18	6	3.0	12	-30	80	12	18	22120.1045
5	**M10 x 1**	**8**	19	40.0	18	6	3.0	14	-30	80	12	18	22120.1065
6	**M12 x 1,5**	**6**	23	48.0	22	6	4.5	16	-30	80	14	30	22120.1046
6	**M12 x 1,5**	**9**	23	48.0	22	6	4.0	20	-30	80	14	30	22120.1066

[1] statistical average value

chanhvinh.com

Dimensions							Spring load[1]				WS		Art. No.
d_1 -0.02 -0.05	d_2	l_2 min.	d_3	l_1	l_3	l_4	F_1 ~	F_2 ~	min.	max.			
[mm]							[N]		[°C]		[mm]	[g]	
8	**M16 x 1,5**	**8**	28	58.0	26	8	6.0	23	-30	80	17	66	22120.1068
8	**M16 x 1,5**	**12**	28	58.0	26	8	7.0	26	-30	80	17	63	22120.1048
10	**M16 x 1,5**	**12**	28	58.0	26	8	7.5	32	-30	80	17	64	22120.1080
12	**M20 x 1,5**	**15**	33	71.5	33	10	9.0	32	-30	80	22	129	22120.1082
with knob from stainless steel – picture 2													
4	**M 8 x 1**	**4**	16	35.0	16	5	3.5	11	–	100	10	20	22120.1054
4	**M 8 x 1**	**6**	16	35.0	16	5	3.0	11	–	100	10	29	22120.1074
5	**M10 x 1**	**5**	18	40.0	18	6	3.0	12	–	100	12	43	22120.1055
5	**M10 x 1**	**8**	18	40.0	18	6	3.0	14	–	100	12	41	22120.1075
6	**M12 x 1,5**	**6**	22	48.0	22	6	4.5	16	–	100	14	63	22120.1056
6	**M12 x 1,5**	**9**	22	48.0	22	6	4.0	20	–	100	14	56	22120.1076
8	**M16 x 1,5**	**8**	27	58.0	26	8	6.0	20	–	100	17	107	22120.1078
8	**M16 x 1,5**	**12**	27	58.0	26	8	7.0	26	–	100	17	109	22120.1058
10	**M16 x 1,5**	**12**	27	58.0	26	8	7.5	32	–	100	17	111	22120.1090
12	**M20 x 1,5**	**15**	32	71.5	33	10	9.0	32	–	100	22	203	22120.1092

[1] statistical average value

Compliance

RoHS-compliant
Compliant with Directive 2011/65/EU [RoHS].

Does not contain SVHC substances
No SVHC substances with more than 0.1% w/w contained - SVHC list [REACH] as of 04.02.2026.

SCIP-code
N/A

Does not contain Proposition 65 substances
No Proposition 65 substances included.
https://www.P65Warnings.ca.gov/

Free from Conflict Minerals

POP-compliant
Contains no persistent organic pollutants – Stockholm Convention [POP] as of September 2025.

PFAS-compliant
Contains no per- and polyfluoroalkyl substances (PFAS).

TSCA-compliant
Agent concentration in this product does not exceed the specified threshold.