chanhvinh.com

Index Plungers • for thin-walled pieces

EH 22120.



Product Description

Index plungers with throughgoing bore for thin-walled pieces.

Material

Body
- Steel, zinc-plated by galvanization

Locking pin
- Stainless steel 1.4305, nickel-plated

Knob
- Thermoplastic PA 6, black, dull

Assembly

By means of a fastening collet, the index plungers can be mounted into pieces having a wall thickness of 1-5 mm.

Operation

When using the locking version, the knob is pulled-out, turned 90° and secured by a notched catch. Depending on the clamping length, the bolt may overhang.

More information

Notes

Knob not removable.

Further products

- Locating Bushings, for index bolts and index plungers

Drawing

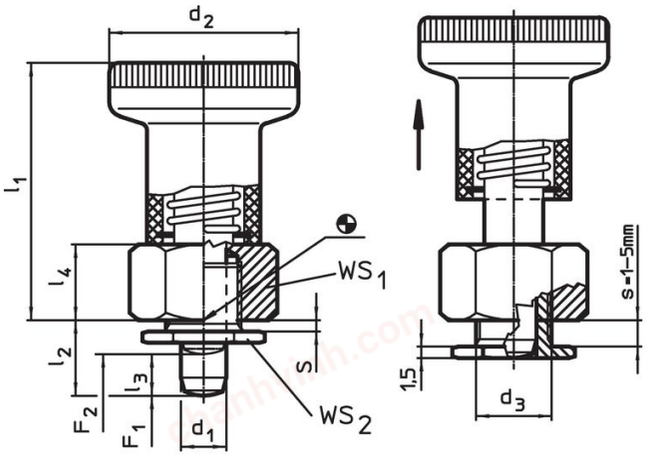

picture 1

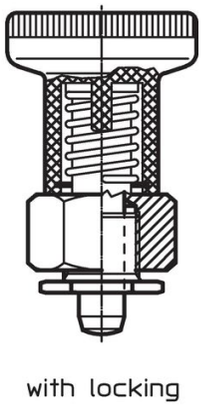

picture 2

Order information

Dimensions								WS_1	WS_2	Spring load[1]					Art. No.
d_1 -0.02 -0.05	l_2	d_2	d_3	l_1	l_3	l_4	s			F_1 ~	F_2 ~	min.	max.		
[mm]								[mm]	[mm]	[N]		[°C]		[g]	
without locking – picture 1															
6	**8.5**	25	10	34	6.0	10	1 – 5	17	14	8.5	22	-30	80	39	22120.0266
6	**10.5**	25	10	34	6.0	10	1 – 5	17	14	8.5	22	-30	80	40	22120.0267
8	**10.0**	31	12	40	7.5	12	1 – 5	19	16	15.5	28	-30	80	63	22120.0268
8	**12.0**	31	12	40	7.5	12	1 – 5	19	16	15.5	28	-30	80	63	22120.0269
with locking – picture 2															
6	**8.5**	25	10	34	6.0	10	1 – 5	17	14	8.5	22	-30	80	39	22120.0286
6	**10.5**	25	10	34	6.0	10	1 – 5	17	14	8.5	22	-30	80	39	22120.0287
8	**10.0**	31	12	40	7.5	12	1 – 5	19	16	15.5	28	-30	80	61	22120.0288
8	**12.0**	31	12	40	7.5	12	1 – 5	19	16	15.5	28	-30	80	62	22120.0289

[1] statistical average value

chanhvinh.com

Accessories

	WS			Art. No.
	WS_1	WS_2	[g]	
	[mm]			
Ring spanner, flat				
	14	16	26	22120.0299

Application example

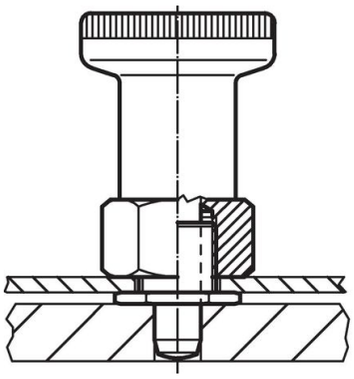

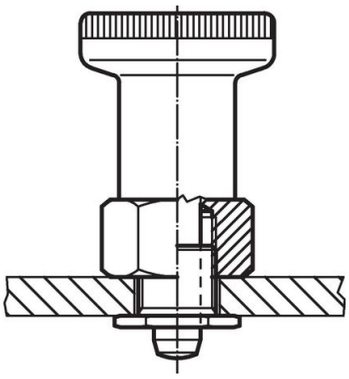

Compliance

For detailed compliance information please select the desired article number.