chanhvinh.com



# Index Plungers • simple finish

## EH 22120.



### Product Description

Application is limited to cases not requiring a precise positioning.
Simple version with very compact dimensions.

#### Material

**Body**
- Steel, zinc-plated by galvanization
- Stainless steel 1.4305

**Locking pin**
- Stainless steel 1.4305

**Knob**
- Thermoplastic PA 6, black, dull

**Pull-ring**
- Stainless steel 1.4310

#### Operation

When using the locking version, the knob is pulled-out, turned 90° and secured by a notched catch (when locking pin should not overhang).

**More information**

#### Notes

Lock nuts have to be purchased separately.

#### Further products

- Locating Bushings, for index bolts and index plungers
- Lock nuts ISO 4035, for index bolts and index plungers

### Drawing

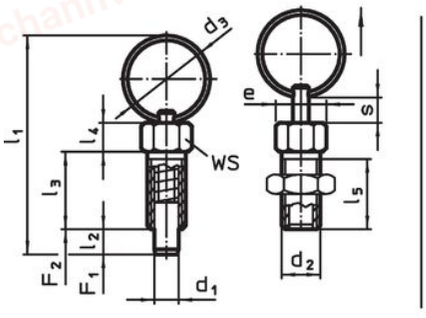


picture 1

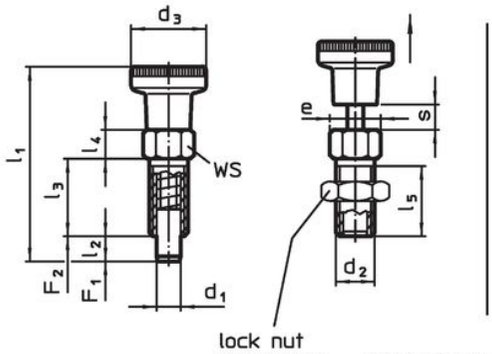


lock nut
22120.0704 – .0708 (Steel)
22120.0714 – .0718 (Stainless steel)

picture 2

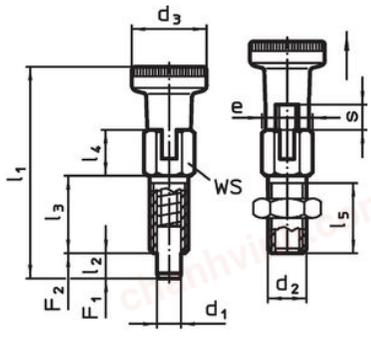


picture 3

### Order information

| Dimensions | | | | | | | | | | WS | Tightening torque | Spring load[1] | | | | | Art. No. |
|---|---|---|---|---|---|---|---|---|---|---|---|---|---|---|---|---|---|
| $d_1$ -0.05 | $d_2$ | $d_3$ | e | $l_1$ | $l_2$ min. | $l_3$ | $l_4$ | $l_5$ | s min. | | max. | $F_1$ ~ | $F_2$ ~ | min. | max. | | |
| [mm] | | | | | | | | | | [mm] | [Nm] | [N] | | [°C] | | [g] | |
| **with pull-ring, without locking – picture 1, Steel** | | | | | | | | | | | | | | | | | |
| 3 | M 6 | 14 | 6.9 | 34.0 | 3.5 | 12 | 4.5 | 10.0 | 3.5 | 6 | 2 | 3 | 12 | – | 250 | 3.2 | 22120.0723 |
| 4 | M 6 | 14 | 6.9 | 34.5 | 4.0 | 12 | 4.5 | 10.0 | 4.0 | 6 | 2 | 3 | 12 | – | 250 | 3.6 | 22120.0724 |
| 5 | M 8 | 18 | 9.2 | 45.0 | 5.0 | 16 | 6.0 | 13.5 | 5.0 | 8 | 7 | 5 | 24 | – | 250 | 8.4 | 22120.0725 |
| 6 | M10 | 24 | 11.5 | 57.5 | 6.0 | 20 | 7.5 | 17.0 | 6.0 | 10 | 15 | 5 | 21 | – | 250 | 17.0 | 22120.0726 |
| 8 | M12 | 30 | 13.8 | 71.0 | 8.0 | 24 | 9.0 | 20.5 | 8.0 | 12 | 20 | 6 | 22 | – | 250 | 31.0 | 22120.0728 |
| **with knob, without locking – picture 2, Steel** | | | | | | | | | | | | | | | | | |
| 3 | M 6 | 12 | 6.9 | 30.0 | 3.5 | 12 | 4.5 | 10.0 | 3.5 | 6 | 2 | 3 | 12 | -30 | 80 | 3.6 | 22120.0743 |
| 4 | M 6 | 12 | 6.9 | 30.5 | 4.0 | 12 | 4.5 | 10.0 | 4.0 | 6 | 2 | 3 | 12 | -30 | 80 | 3.8 | 22120.0744 |
| 5 | M 8 | 16 | 9.2 | 40.0 | 5.0 | 16 | 6.0 | 13.5 | 5.0 | 8 | 7 | 5 | 24 | -30 | 80 | 9.2 | 22120.0745 |
| 6 | M10 | 18 | 11.5 | 49.0 | 6.0 | 20 | 7.5 | 17.0 | 6.0 | 10 | 15 | 5 | 21 | -30 | 80 | 18.0 | 22120.0746 |
| 8 | M12 | 21 | 13.8 | 59.0 | 8.0 | 24 | 9.0 | 20.5 | 8.0 | 12 | 20 | 6 | 22 | -30 | 80 | 31.0 | 22120.0748 |

[1] statistical average value

chanhvinh.com



| Dimensions | | | | | | | | | | WS | Tightening torque | Spring load[1] | | | | | Art. No. |
|---|---|---|---|---|---|---|---|---|---|---|---|---|---|---|---|---|---|
| $d_1$ -0.05 | $d_2$ | $d_3$ | e | $l_1$ | $l_2$ min. | $l_3$ | $l_4$ | $l_5$ | s min. | | max. | $F_1$ ~ | $F_2$ ~ | min. | max. | | |
| [mm] | | | | | | | | | | [mm] | [Nm] | [N] | | [°C] | | [g] | |
| **with knob and locking – picture 3, Steel** | | | | | | | | | | | | | | | | | |
| **3** | M 6 | 12 | 6.9 | 32.5 | 3.5 | 12 | 7.0 | 10.0 | 3.5 | 6 | 2 | 3 | 12 | -30 | 80 | 3.8 | 22120.0763 |
| **4** | M 6 | 12 | 6.9 | 33.0 | 4.0 | 12 | 7.0 | 10.0 | 4.0 | 6 | 2 | 3 | 12 | -30 | 80 | 4.2 | 22120.0764 |
| **5** | M 8 | 16 | 9.2 | 43.5 | 5.0 | 16 | 9.5 | 13.5 | 5.0 | 8 | 7 | 5 | 24 | -30 | 80 | 9.6 | 22120.0765 |
| **6** | M10 | 18 | 11.5 | 52.0 | 6.0 | 20 | 10.5 | 17.0 | 6.0 | 10 | 15 | 5 | 21 | -30 | 80 | 18.0 | 22120.0766 |
| **8** | M12 | 21 | 13.8 | 63.5 | 8.0 | 24 | 13.5 | 20.5 | 8.0 | 12 | 20 | 6 | 22 | -30 | 80 | 33.0 | 22120.0768 |
| **with pull-ring, without locking – picture 1, Stainless steel** | | | | | | | | | | | | | | | | | |
| **3** | M 6 | 14 | 6.9 | 34.0 | 3.5 | 12 | 4.5 | 10.0 | 3.5 | 6 | 2 | 3 | 12 | – | 250 | 3.4 | 22120.0773 |
| **4** | M 6 | 14 | 6.9 | 34.5 | 4.0 | 12 | 4.5 | 10.0 | 4.0 | 6 | 2 | 3 | 12 | – | 250 | 3.7 | 22120.0774 |
| **5** | M 8 | 18 | 9.2 | 45.0 | 5.0 | 16 | 6.0 | 13.5 | 5.0 | 8 | 7 | 5 | 24 | – | 250 | 8.5 | 22120.0775 |
| **6** | M10 | 24 | 11.5 | 57.5 | 6.0 | 20 | 7.5 | 17.0 | 6.0 | 10 | 15 | 5 | 21 | – | 250 | 17.0 | 22120.0776 |
| **8** | M12 | 30 | 13.8 | 71.0 | 8.0 | 24 | 9.0 | 20.5 | 8.0 | 12 | 20 | 6 | 22 | – | 250 | 31.0 | 22120.0778 |
| **with knob, without locking – picture 2, Stainless steel** | | | | | | | | | | | | | | | | | |
| **3** | M 6 | 12 | 6.9 | 30.0 | 3.5 | 12 | 4.5 | 10.0 | 3.5 | 6 | 2 | 3 | 12 | -30 | 80 | 3.7 | 22120.0783 |
| **4** | M 6 | 12 | 6.9 | 30.5 | 4.0 | 12 | 4.5 | 10.0 | 4.0 | 6 | 2 | 3 | 12 | -30 | 80 | 4.0 | 22120.0784 |
| **5** | M 8 | 16 | 9.2 | 40.0 | 5.0 | 16 | 6.0 | 13.5 | 5.0 | 8 | 7 | 5 | 24 | -30 | 80 | 9.0 | 22120.0785 |
| **6** | M10 | 18 | 11.5 | 49.0 | 6.0 | 20 | 7.5 | 17.0 | 6.0 | 10 | 15 | 5 | 21 | -30 | 80 | 18.0 | 22120.0786 |
| **8** | M12 | 21 | 13.8 | 59.0 | 8.0 | 24 | 9.0 | 20.5 | 8.0 | 12 | 20 | 6 | 22 | -30 | 80 | 31.0 | 22120.0788 |
| **with knob and locking – picture 3, Stainless steel** | | | | | | | | | | | | | | | | | |
| **3** | M 6 | 12 | 6.9 | 32.5 | 3.5 | 12 | 7.0 | 10.0 | 3.5 | 6 | 2 | 3 | 12 | -30 | 80 | 3.7 | 22120.0793 |
| **4** | M 6 | 12 | 6.9 | 33.0 | 4.0 | 12 | 7.0 | 10.0 | 4.0 | 6 | 2 | 3 | 12 | -30 | 80 | 4.0 | 22120.0794 |
| **5** | M 8 | 16 | 9.2 | 43.5 | 5.0 | 16 | 9.5 | 13.5 | 5.0 | 8 | 7 | 5 | 24 | -30 | 80 | 9.0 | 22120.0795 |
| **6** | M10 | 18 | 11.5 | 52.0 | 6.0 | 20 | 10.5 | 17.0 | 6.0 | 10 | 15 | 5 | 21 | -30 | 80 | 18.0 | 22120.0796 |
| **8** | M12 | 21 | 13.8 | 63.5 | 8.0 | 24 | 13.5 | 20.5 | 8.0 | 12 | 20 | 6 | 22 | -30 | 80 | 32.0 | 22120.0798 |

[1] statistical average value

## Application example

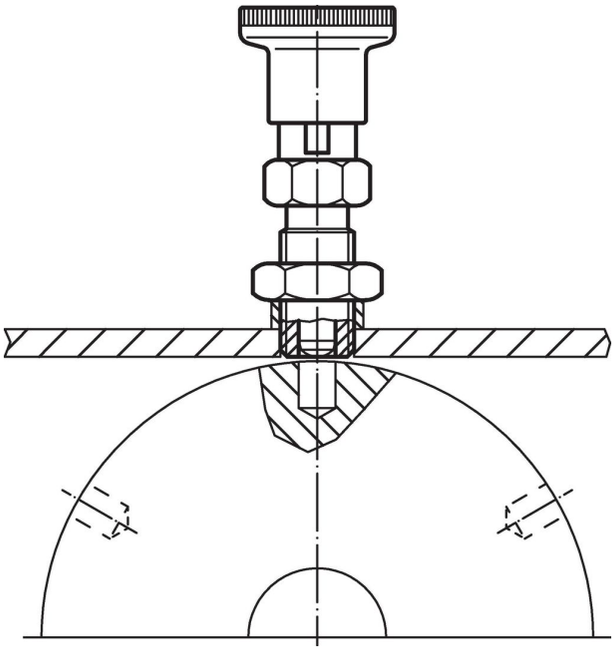

## Compliance

For detailed compliance information please select the desired article number.