chanhvinh.com

Index Plungers • with mounting flange
EH 22120.



Product Description

Index plungers are used in indexing bores and serve for secure locking and precise positioning. Components can be reliably positioned or released without the use of additional tools. This enables fast, repeatable positioning and ensures a high level of process reliability.
Index plungers are used wherever components need to be positioned or locked quickly, safely and precisely. Typical applications include mechanical and plant engineering, fixture and tool construction, as well as assembly and production technology. They also ensure smooth operation in transport and packaging systems.
These index plungers are suitable for mounting on thin-walled parts.
This version of the index plunger is designed with compact dimensions.

Material

Flange
- Zinc die-cast, zinc-plated by galvanization

Locking pin
- Steel, hardened
- Stainless steel 1.4305, nickel-plated

Knob
- Thermoplastic PA 6, black, dull

Operation

When using the locking version the knob is pulled out and turned 90°.

More information

Notes

Knob not removable.

Further products

- Locating Bushings, for index bolts and index plungers

Drawing

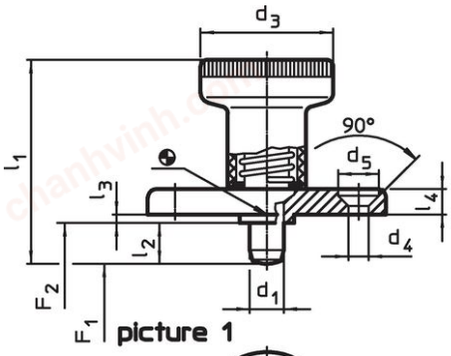

picture 1

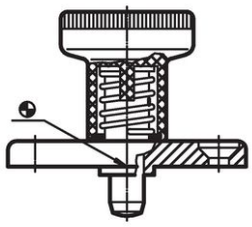

picture 2 with locking

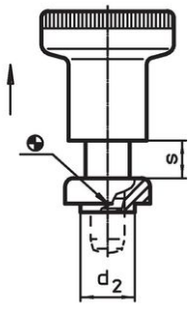

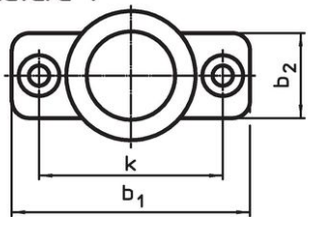

Order information

Dimensions													Spring load[1]					Art. No.
d_1 -0.02 -0.05	l_2	b_1	b_2	d_2 -0.02 -0.1	d_3	d_4	d_5	k	l_1	l_3 -0.15	l_4	s	F_1 ~	F_2 ~	min.	max.		
[mm]													[N]		[°C]		[g]	
without locking – picture 1, Steel																		
6	**6**	40	18	10	25	4.3	8.3	30	37	2.5	4.5	6	8.5	22	-30	80	36	22120.0926
6	**14**	40	18	10	25	4.3	8.3	30	45	2.5	4.5	6	8.5	22	-30	80	37	22120.0927[2]
8	**8**	46	20	12	31	5.3	10.4	34	44	2.5	5.5	8	15.5	28	-30	80	60	22120.0928
8	**18**	46	20	12	31	5.3	10.4	34	54	2.5	5.5	8	15.5	28	-30	80	63	22120.0929[2]

[1] statistical average value

[2] Locking pin is not completely retractable

chanhvinh.com

Dimensions													Spring load[1]					Art. No.
d_1 -0.02 -0.05	l_2	b_1	b_2	d_2 -0.02 -0.1	d_3	d_4	d_5	k	l_1	l_3 -0.15	l_4	s	F_1 ~	F_2 ~	min.	max.		
[mm]													[N]		[°C]		[g]	
with locking – picture 2, Steel																		
6	**6**	40	18	10	25	4.3	8.3	30	37	2.5	4.5	6	8.5	22	-30	80	36	22120.0936
6	**14**	40	18	10	25	4.3	8.3	30	45	2.5	4.5	6	8.5	22	-30	80	38	22120.0937[2]
8	**8**	46	20	12	31	5.3	10.4	34	44	2.5	5.5	8	15.5	28	-30	80	60	22120.0938
8	**18**	46	20	12	31	5.3	10.4	34	54	2.5	5.5	8	15.5	28	-30	80	63	22120.0939[2]
without locking – picture 1, Stainless steel																		
6	**6**	40	18	10	25	4.3	8.3	30	37	2.5	4.5	6	8.5	22	-30	80	36	22120.0966
6	**14**	40	18	10	25	4.3	8.3	30	45	2.5	4.5	6	8.5	22	-30	80	38	22120.0967[2]
8	**8**	46	20	12	31	5.3	10.4	34	44	2.5	5.5	8	15.5	28	-30	80	59	22120.0968
8	**18**	46	20	12	31	5.3	10.4	34	54	2.5	5.5	8	15.5	28	-30	80	62	22120.0969[2]
with locking – picture 2, Stainless steel																		
6	**6**	40	18	10	25	4.3	8.3	30	37	2.5	4.5	6	8.5	22	-30	80	37	22120.0976
6	**14**	40	18	10	25	4.3	8.3	30	45	2.5	4.5	6	8.5	22	-30	80	39	22120.0977[2]
8	**8**	46	20	12	31	5.3	10.4	34	44	2.5	5.5	8	15.5	28	-30	80	58	22120.0978
8	**18**	46	20	12	31	5.3	10.4	34	54	2.5	5.5	8	15.5	28	-30	80	63	22120.0979[2]

[1] statistical average value

[2] Locking pin is not completely retractable

Application example

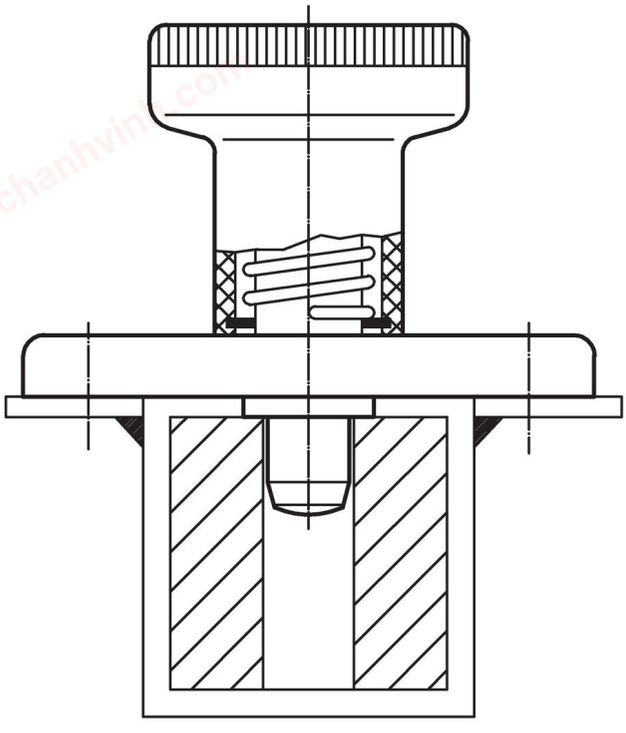

Compliance

For detailed compliance information please select the desired article number.