chanhvinh.com



# Locating Bushings • for index bolts and index plungers
## EH 22110.



### Product Description

Locating bushings are suitable for locating the locking pin of the index bolt or index plunger. Can also be mounted in mounting blocks, die-cast EH 22110. and mounting blocks EH 22120..

**Material**

- Steel, nitrided

**More information**

**Notes**

The thread is matched to the mounting blocks for index bolts and index plungers, die-cast (EH 22110.) and mounting blocks for index bolts and index plungers (EH 22120.).

**Further products**

- Mounting Blocks, for index bolts and index plungers, die-cast
- Mounting Blocks, for index bolts and index plungers

### Drawing

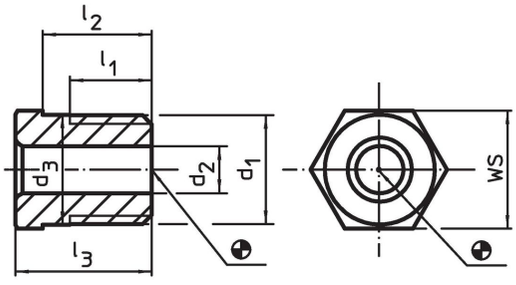


### Order information

| Dimensions | | | | | | For pin | WS | max. | | Art. No. |
|---|---|---|---|---|---|---|---|---|---|---|
| $d_1$ | $d_2$ +0.1 | $d_3$ ±0.3 | $l_1$ min. | $l_2$ -0.3 | $l_3$ | | | | | |
| [mm] | | | | | | [mm] | [mm] | [°C] | [g] | |
| **M12 x 1,5** | 4.2 | 12.1 | 9 | 10 | 13 | **4** | 13 | 250 | 10.0 | 22110.0454 |
| **M12 x 1,5** | 5.2 | 12.1 | 9 | 10 | 13 | **5** | 13 | 250 | 9.6 | 22110.0455 |
| **M12 x 1,5** | 6.2 | 12.1 | 9 | 10 | 13 | **6** | 13 | 250 | 8.5 | 22110.0456 |
| **M16 x 1,5** | 8.2 | 16.1 | 11 | 12 | 15 | **8** | 17 | 250 | 18.0 | 22110.0458 |
| **M16 x 1,5** | 10.2 | 16.1 | 11 | 12 | 15 | **10** | 17 | 250 | 14.0 | 22110.0460 |
| **M16 x 1,5** | 12.2 | 16.1 | 11 | 12 | 15 | **12** | 17 | 250 | 9.1 | 22110.0462 |

chanhvinh.com



## Application example

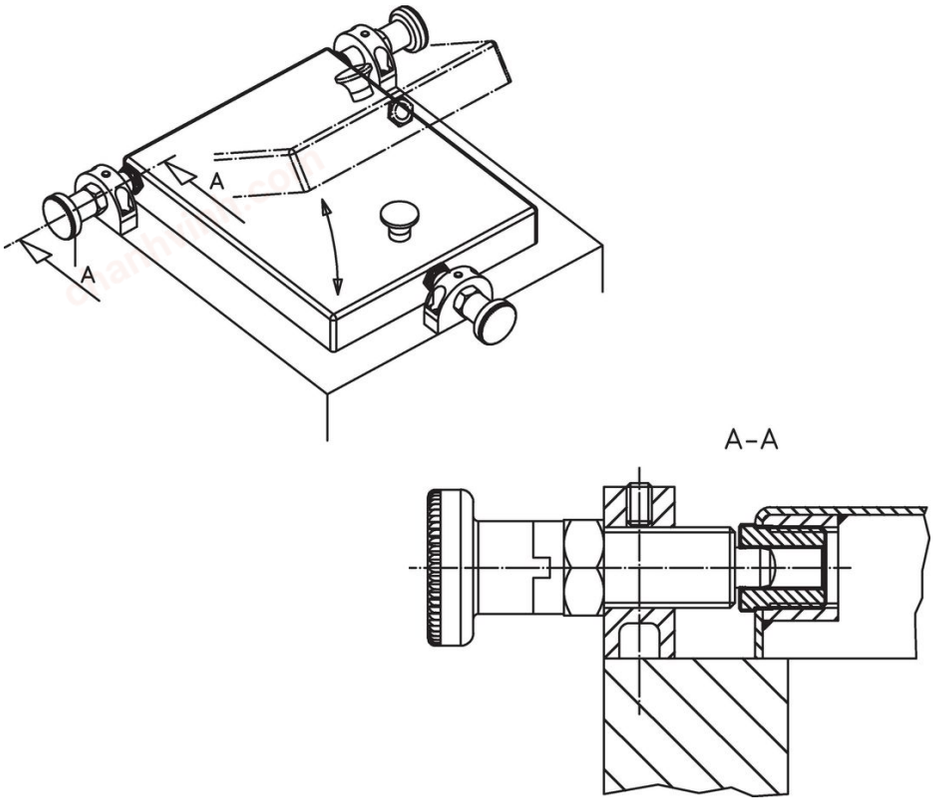


## Compliance

For detailed compliance information please select the desired article number.