chanhvinh.com

Index Plungers Compact • with hexagon collar, with T-Handle
EH 22110.



Product Description

Index plungers are used in indexing bores and serve for secure locking and precise positioning. Components can be reliably positioned or released without the use of additional tools. This enables fast, repeatable positioning and ensures a high level of process reliability.
Index plungers are used wherever components need to be positioned or locked quickly, safely and precisely. Typical applications include mechanical and plant engineering, fixture and tool construction, as well as assembly and production technology. They also ensure smooth operation in transport and packaging systems.
- Simple handling, e.g. when using safety gloves, with higher pull release.

Types with / without lock have the same building height.

Material

Body
- Steel, blackened
- Stainless steel 1.4305

Locking pin
- Steel, hardened
- Stainless steel 1.4305, nickel-plated

Knob
- Thermoplastic PA 6, black, dull

Assembly

The screw length can be adapted by distance collars (EH 22120.).
Due to a thread recess the index plungers can be completely screwed in.

More information

Notes

Knob not removable.
Lock nuts have to be purchased separately.

Further products

- Mounting Blocks, for index bolts and index plungers, die-cast
- Locating Bushings, for index bolts and index plungers
- Distance Collars, for index plungers
- Lock nuts ISO 8675 (DIN 439), for index bolts and index plungers

Drawing

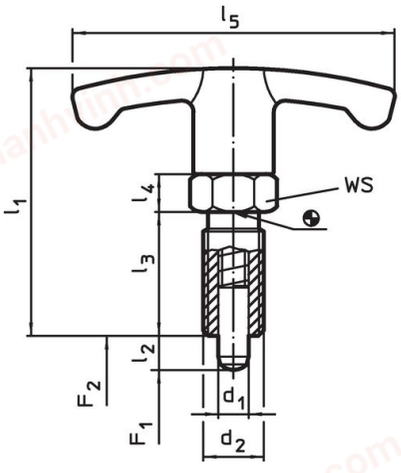

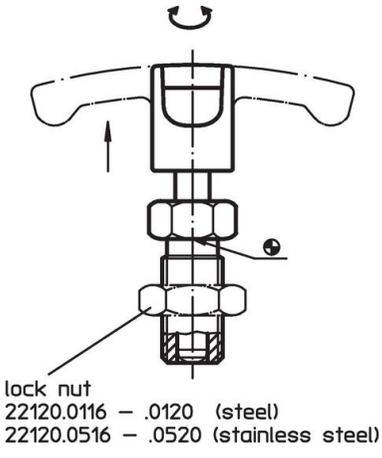

chanhvinh.com

Order information

Dimensions							WS	Spring load[1]					Art. No.
d_1 -0.02 -0.05	l_2	d_2	l_1	l_3	l_4	l_5		F_1 ~	F_2 ~	min.	max.		
[mm]							[mm]	[N]		[°C]		[g]	
Steel													
6	**6**	M12 x 1,5	48	22	6	54	14	6.5	19	-30	80	31	22110.0820
6	**9**	M12 x 1,5	48	22	6	54	14	6.0	25	-30	80	31	22110.0822
8	**8**	M16 x 1,5	59	26	8	59	17	8.5	26	-30	80	64	22110.0824
8	**12**	M16 x 1,5	59	26	8	59	17	8.5	28	-30	80	65	22110.0826
10	**12**	M16 x 1,5	59	26	8	59	17	9.5	38	-30	80	66	22110.0828
12	**15**	M20 x 1,5	68	33	10	59	22	11.5	40	-30	80	121	22110.0830
Stainless steel													
6	**6**	M12 x 1,5	48	22	6	54	14	6.5	19	-30	80	31	22110.0920
6	**9**	M12 x 1,5	48	22	6	54	14	6.0	25	-30	80	32	22110.0922
8	**8**	M16 x 1,5	59	26	8	59	17	8.5	26	-30	80	64	22110.0924
8	**12**	M16 x 1,5	59	26	8	59	17	8.5	28	-30	80	64	22110.0926
10	**12**	M16 x 1,5	59	26	8	59	17	9.5	38	-30	80	66	22110.0928
12	**15**	M20 x 1,5	68	33	10	59	22	11.5	40	-30	80	120	22110.0930

[1] statistical average value

Application example

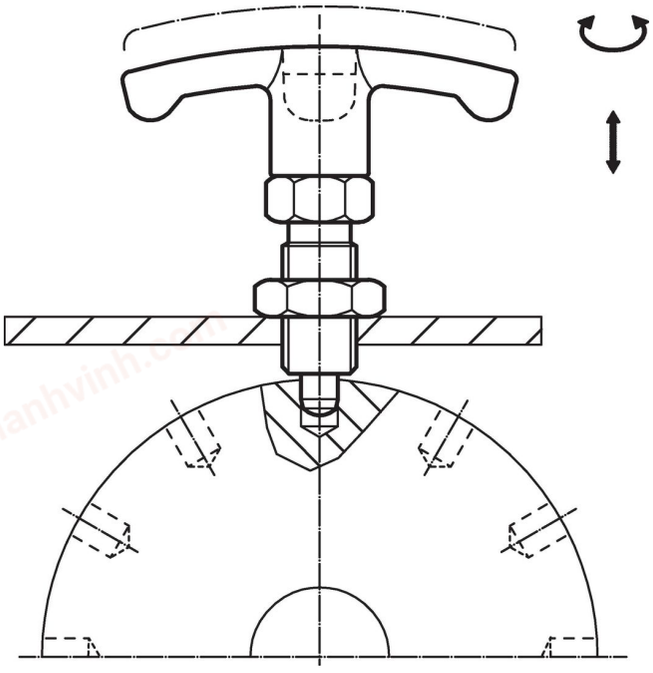

Compliance

For detailed compliance information please select the desired article number.