chanhvinh.com

Index Plungers Mini Indexes • basic type

EH 22110.



Product Description

Particularly suitable for screwing into thin walled pieces.
Index plungers are used in indexing bores and serve for secure locking and precise positioning. Components can be reliably positioned or released without the use of additional tools. This enables fast, repeatable positioning and ensures a high level of process reliability.
Index plungers are used wherever components need to be positioned or locked quickly, safely and precisely. Typical applications include mechanical and plant engineering, fixture and tool construction, as well as assembly and production technology. They also ensure smooth operation in transport and packaging systems.
The index plungers series "mini index" consists of versions with particularly compact dimensions.

Material

Body
- Steel, zinc-plated by galvanization
- Stainless steel 1.4305

Locking pin
- Stainless steel 1.4305

Knob
- Thermoplastic PA 6, black, dull

Assembly

Screw in the mini index. By lifting the knob, the hexagon will be released for assembly.
The screw length can be adapted by distance collars (EH 22120.).
Due to a thread recess the index plungers can be completely screwed in.

Operation

When using the self-locking type the knob is pulled-out, turned 30° and secured by a notched catch.

More information

Notes

Knob not removable.

Further products

- Distance Collars, for index plungers

Drawing

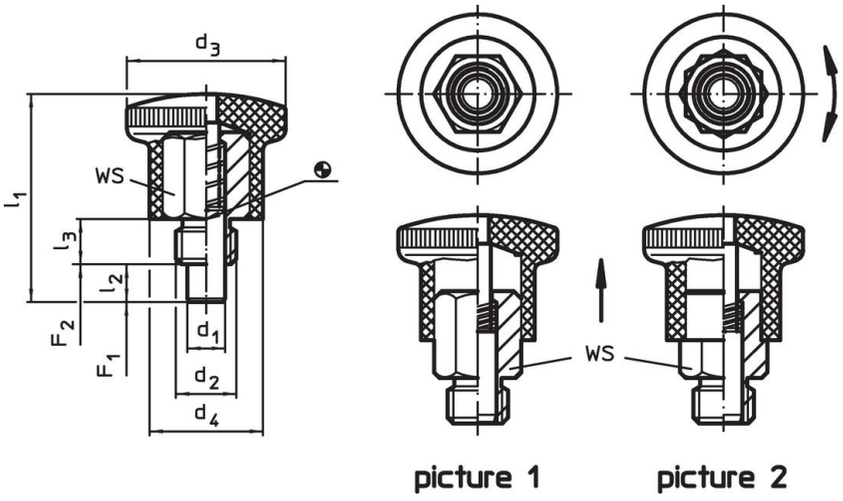

Order information

Dimensions							WS	Spring load[1]					Art. No.
d_1 h9	d_2	d_3	d_4	l_1	l_2 min.	l_3		F_1 ~	F_2 ~	min.	max.		
[mm]							[mm]	[N]		[°C]		[g]	
without locking – picture 1, Steel													
4	M 8	21	15	27.5	5	6	10	4	12	-30	80	14	22110.0602
4	M 8 x 1	21	15	27.5	5	6	10	4	12	-30	80	14	22110.0604
5	M10	25	18	34.0	6	8	12	6	16	-30	80	25	22110.0606
5	M10 x 1	25	18	34.0	6	8	12	6	16	-30	80	24	22110.0608

[1] statistical average value

chanhvinh.com

Dimensions							WS	Spring load[1]					Art. No.
d_1 h9	d_2	d_3	d_4	l_1	l_2 min.	l_3		F_1 ~	F_2 ~	min.	max.		
[mm]							[mm]	[N]		[°C]		[g]	
6	**M10**	25	18	34.0	6	8	12	6	16	-30	80	25	22110.0610
6	**M10 x 1**	25	18	34.0	6	8	12	6	16	-30	80	25	22110.0612
6	**M12**	28	20	40.5	7	10	14	10	23	-30	80	40	22110.0614
6	**M12 x 1,5**	28	20	40.5	7	10	14	10	23	-30	80	40	22110.0616
7	**M12**	28	20	40.5	7	10	14	10	23	-30	80	41	22110.0618
7	**M12 x 1,5**	28	20	40.5	7	10	14	10	23	-30	80	40	22110.0620
8	**M16**	33	23	47.5	10	12	17	11	35	-30	80	66	22110.0622
8	**M16 x 1,5**	33	23	47.5	10	12	17	11	35	-30	80	67	22110.0624
10	**M16**	33	23	47.5	10	12	17	11	35	-30	80	68	22110.0626
10	**M16 x 1,5**	33	23	47.5	10	12	17	11	35	-30	80	69	22110.0628
with locking – picture 2, Steel													
4	**M 8**	21	15	27.5	5	6	10	4	12	-30	80	14	22110.0630
4	**M 8 x 1**	21	15	27.5	5	6	10	4	12	-30	80	13	22110.0632
5	**M10**	25	18	34.0	6	8	12	6	16	-30	80	23	22110.0634
5	**M10 x 1**	25	18	34.0	6	8	12	6	16	-30	80	23	22110.0636
6	**M10**	25	18	34.0	6	8	12	6	16	-30	80	24	22110.0638
6	**M10 x 1**	25	18	34.0	6	8	12	6	16	-30	80	25	22110.0640
6	**M12**	28	20	40.5	7	10	14	10	23	-30	80	38	22110.0642
6	**M12 x 1,5**	28	20	40.5	7	10	14	10	23	-30	80	39	22110.0644
7	**M12**	28	20	40.5	7	10	14	10	23	-30	80	39	22110.0646
7	**M12 x 1,5**	28	20	40.5	7	10	14	10	23	-30	80	39	22110.0648
8	**M16**	33	23	47.5	10	12	17	11	35	-30	80	64	22110.0650
8	**M16 x 1,5**	33	23	47.5	10	12	17	11	35	-30	80	65	22110.0652
10	**M16**	33	23	47.5	10	12	17	11	35	-30	80	66	22110.0654
10	**M16 x 1,5**	33	23	47.5	10	12	17	11	35	-30	80	67	22110.0656
without locking – picture 1, Stainless steel													
4	**M 8**	21	15	27.5	5	6	10	4	12	-30	80	14	22110.0702
4	**M 8 x 1**	21	15	27.5	5	6	10	4	12	-30	80	14	22110.0704
5	**M10**	25	18	34.0	6	8	12	6	16	-30	80	24	22110.0706
5	**M10 x 1**	25	18	34.0	6	8	12	6	16	-30	80	25	22110.0708
6	**M10**	25	18	34.0	6	8	12	6	16	-30	80	24	22110.0710
6	**M10 x 1**	25	18	34.0	6	8	12	6	16	-30	80	25	22110.0712
6	**M12**	28	20	40.5	7	10	14	10	23	-30	80	40	22110.0714
6	**M12 x 1,5**	28	20	40.5	7	10	14	10	23	-30	80	40	22110.0716
7	**M12**	28	20	40.5	7	10	14	10	23	-30	80	40	22110.0718
7	**M12 x 1,5**	28	20	40.5	7	10	14	10	23	-30	80	41	22110.0720
8	**M16**	33	23	47.5	10	12	17	11	35	-30	80	67	22110.0722
8	**M16 x 1,5**	33	23	47.5	10	12	17	11	35	-30	80	67	22110.0724
10	**M16**	33	23	47.5	10	12	17	11	35	-30	80	68	22110.0726
10	**M16 x 1,5**	33	23	47.5	10	12	17	11	35	-30	80	69	22110.0728
with locking – picture 2, Stainless steel													
4	**M 8**	21	15	27.5	5	6	10	4	12	-30	80	13	22110.0730
4	**M 8 x 1**	21	15	27.5	5	6	10	4	12	-30	80	14	22110.0732
5	**M10**	25	18	34.0	6	8	12	6	16	-30	80	23	22110.0734
5	**M10 x 1**	25	18	34.0	6	8	12	6	16	-30	80	24	22110.0736
6	**M10**	25	18	34.0	6	8	12	6	16	-30	80	24	22110.0738
6	**M10 x 1**	25	18	34.0	6	8	12	6	16	-30	80	25	22110.0740
6	**M12**	28	20	40.5	7	10	14	10	23	-30	80	38	22110.0742
6	**M12 x 1,5**	28	20	40.5	7	10	14	10	23	-30	80	39	22110.0744
7	**M12**	28	20	40.5	7	10	14	10	23	-30	80	39	22110.0746
7	**M12 x 1,5**	28	20	40.5	7	10	14	10	23	-30	80	39	22110.0748
8	**M16**	33	23	47.5	10	12	17	11	35	-30	80	64	22110.0750
8	**M16 x 1,5**	33	23	47.5	10	12	17	11	35	-30	80	65	22110.0752
10	**M16**	33	23	47.5	10	12	17	11	35	-30	80	66	22110.0754
10	**M16 x 1,5**	33	23	47.5	10	12	17	11	35	-30	80	68	22110.0756

[1] statistical average value

chanhvinh.com

Application example

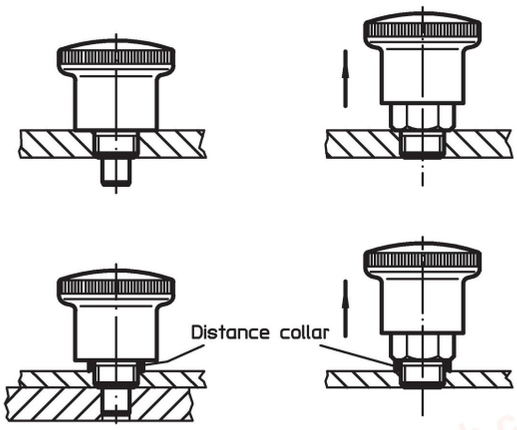

Compliance

For detailed compliance information please select the desired article number.