chanhvinh.com

Index Plungers Mini Indexes • with mounting flange

EH 22110.



Product Description

This index plunger is especially suitable for screwing on thin-walled parts.
Index plungers are used in indexing bores and serve for secure locking and precise positioning. Components can be reliably positioned or released without the use of additional tools. This enables fast, repeatable positioning and ensures a high level of process reliability.
Index plungers are used wherever components need to be positioned or locked quickly, safely and precisely. Typical applications include mechanical and plant engineering, fixture and tool construction, as well as assembly and production technology. They also ensure smooth operation in transport and packaging systems.
The index plungers series "mini index" consists of versions with particularly compact dimensions.

Material

Flange
- Zinc die-cast, zinc-plated by galvanization

Locking pin
- Stainless steel 1.4305

Knob
- Thermoplastic PA 6, black, dull

Operation

When using the self-locking type the knob is pulled-out, turned 30° and secured by a notched catch.

More information

Notes

Knob not removable.

Drawing

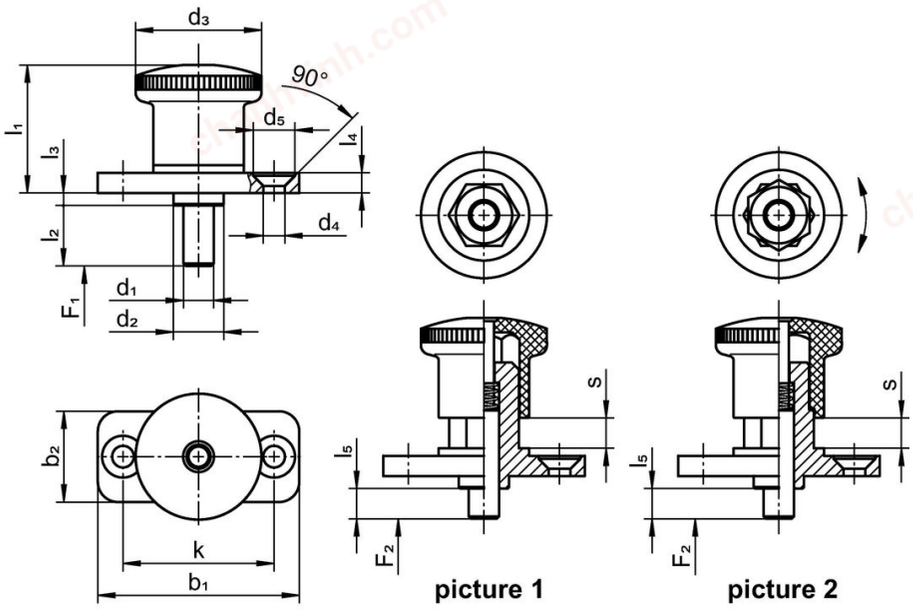

Order information

Dimensions													Spring load[1]					Art. No.
d_1 h9	l_2	b_1	b_2	d_2	d_3	d_4	k	l_1	l_3	l_4	l_5	s	F_1 ~	F_2 ~	min.	max.		
[mm]													[N]		[°C]		[g]	
without locking – picture 1																		
4	**5**	35	15	8	21	4.3	25	20.5	2.0	4	0	5	4	12	-30	80	23	22110.1205
4	**10**	35	15	8	21	4.3	25	20.5	2.0	4	5	5	4	12	-30	80	24	22110.1210
5	**6**	40	18	10	25	4.3	30	25.5	2.5	4	0	6	6	16	-30	80	39	22110.1215
5	**12**	40	18	10	25	4.3	30	25.5	2.5	4	6	6	6	16	-30	80	40	22110.1220
6	**6**	40	18	10	25	4.3	30	25.5	2.5	4	0	6	6	16	-30	80	40	22110.1225
6	**12**	40	18	10	25	4.3	30	25.5	2.5	4	6	6	6	16	-30	80	41	22110.1230

[1] statistical average value

chanhvinh.com

Dimensions													Spring load[1]					Art. No.
d_1 h9	l_2	b_1	b_2	d_2	d_3	d_4	k	l_1	l_3	l_4	l_5	s	F_1 ~	F_2 ~	min.	max.		
[mm]													[N]		[°C]		[g]	
8	**10**	50	23	14	33	5.3	38	35.0	2.5	5	0	10	11	35	-30	80	95	22110.1235
8	**20**	50	23	14	33	5.3	38	35.0	2.5	5	10	10	11	35	-30	80	99	22110.1240
10	**10**	50	23	14	33	5.3	38	35.0	2.5	5	0	10	11	35	-30	80	97	22110.1245
10	**20**	50	23	14	33	5.3	38	35.0	2.5	5	10	10	11	35	-30	80	103	22110.1250
with locking – picture 2																		
4	**5**	35	15	8	21	4.3	25	20.5	2.0	4	0	5	4	12	-30	80	23	22110.1305
4	**10**	35	15	8	21	4.3	25	20.5	2.0	4	5	5	4	12	-30	80	24	22110.1310
5	**6**	40	18	10	25	4.3	30	25.5	2.5	4	0	6	6	16	-30	80	39	22110.1315
5	**12**	40	18	10	25	4.3	30	25.5	2.5	4	6	6	6	16	-30	80	40	22110.1320
6	**6**	40	18	10	25	4.3	30	25.5	2.5	4	0	6	6	16	-30	80	39	22110.1325
6	**12**	40	18	10	25	4.3	30	25.5	2.5	4	6	6	6	16	-30	80	41	22110.1330
8	**10**	50	23	14	33	5.3	38	35.0	2.5	5	0	10	11	35	-30	80	94	22110.1335
8	**20**	50	23	14	33	5.3	38	35.0	2.5	5	10	10	11	35	-30	80	97	22110.1340
10	**10**	50	23	14	33	5.3	38	35.0	2.5	5	0	10	11	35	-30	80	96	22110.1345
10	**20**	50	23	14	33	5.3	38	35.0	2.5	5	10	10	11	35	-30	80	102	22110.1350

[1] statistical average value

Compliance

RoHS-compliant
Compliant with Directive 2011/65/EU [RoHS].

Does not contain SVHC substances
No SVHC substances with more than 0.1% w/w contained - SVHC list [REACH] as of 04.02.2026.

SCIP-code
N/A

Does not contain Proposition 65 substances
No Proposition 65 substances included.
https://www.P65Warnings.ca.gov/

Free from Conflict Minerals
This product does not contain any substances designated as "conflict minerals" such as tantalum, tin, gold or tungsten from the Democratic Republic of Congo or adjacent countries.

POP-compliant
Contains no persistent organic pollutants – Stockholm Convention [POP] as of September 2025.

PFAS-compliant
Contains no per- and polyfluoroalkyl substances (PFAS).

TSCA-compliant
Agent concentration in this product does not exceed the specified threshold.