chanhvinh.com

Index Plungers • with mounting flange, horizontal, stainless steel

EH 22110.



Product Description

Index plungers are used in indexing bores and serve for secure locking and precise positioning. Components can be reliably positioned or released without the use of additional tools. This enables fast, repeatable positioning and ensures a high level of process reliability.
Index plungers are used wherever components need to be positioned or locked quickly, safely and precisely. Typical applications include mechanical and plant engineering, fixture and tool construction, as well as assembly and production technology. They also ensure smooth operation in transport and packaging systems.

Material

Housing
- Stainless steel 1.4308, precision casting, bright, matt blasted

Locking pin
- Stainless steel 1.4305

Knob
- Thermoplastic PA 6, black, dull

Pull-ring
- Stainless steel 1.4310

Assembly

Assembly by means of washers ISO 7092.

Operation

When using the locking version, the knob is pulled-out, turned 90° and secured by a notched catch (when locking pin should not overhang).

More information

Notes

Knob not removable.

Drawing

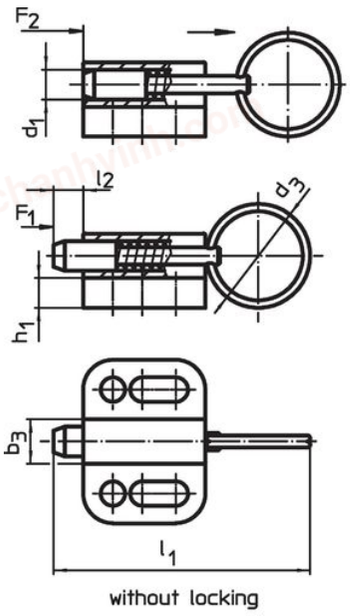

without locking

picture 1

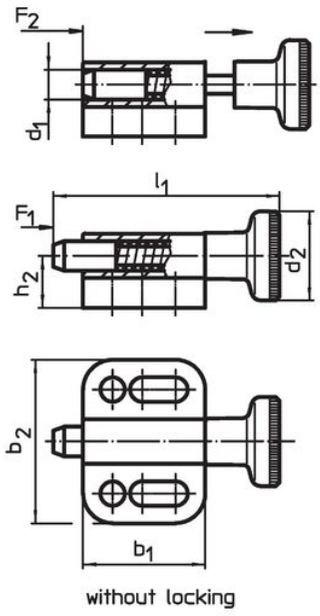

without locking

picture 2

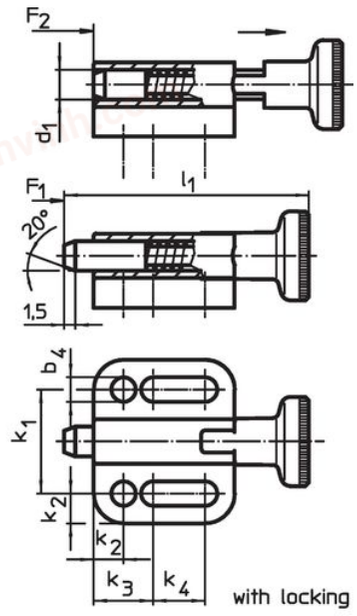

with locking

picture 3

Order information

Dimensions															Spring load[1]					Art. No.
d_1 h11	d_2	d_3	b_1	b_2	b_3	b_4 -0.2	h_1	h_2	k_1 ±0.05	k_2	k_3	k_4	l_1	l_2 min.	F_1 ~	F_2 ~	min.	max.		
[mm]															[N]		[°C]		[g]	
with pull-ring, without locking – picture 1																				
4	–	14	16.5	22	6.0	3.3	4.0	7.0	14	4.0	8	4.5	34.5	4	3	12	–	100	12	22110.2304
5	–	18	22.0	28	8.0	4.3	4.5	9.5	18	5.0	10	7.0	45.0	5	5	24	–	100	24	22110.2305
6	–	24	27.5	32	10.0	5.4	5.0	10.5	21	5.5	12	10.0	57.5	6	5	21	–	100	42	22110.2306
8	–	30	33.0	34	12.0	5.4	6.0	12.5	23	5.5	12	15.5	71.0	8	6	22	–	100	67	22110.2308
10	–	30	35.0	39	14.5	6.5	6.0	14.5	27	6.0	15	13.5	75.0	10	4	25	–	100	93	22110.2310

[1] statistical average value

chanhvinh.com

Dimensions															Spring load[1]					Art. No.
d_1 h11	d_2	d_3	b_1	b_2	b_3	b_4 -0.2	h_1	h_2	k_1 ±0.05	k_2	k_3	k_4	l_1	l_2 min.	F_1 ~	F_2 ~	min.	max.		
[mm]															[N]		[°C]		[g]	
with knob, without locking – picture 2																				
4	12	–	16.5	22	6.0	3.3	4.0	7.0	14	4.0	8	4.5	30.5	4	3	12	-30	80	14	22110.2324
5	16	–	22.0	28	8.0	4.3	4.5	9.5	18	5.0	10	7.0	40.0	5	5	24	-30	80	26	22110.2325
6	18	–	27.5	32	10.0	5.4	5.0	10.5	21	5.5	12	10.0	49.0	6	5	21	-30	80	44	22110.2326
8	21	–	33.0	34	12.0	5.4	6.0	12.5	23	5.5	12	15.5	59.0	8	6	22	-30	80	67	22110.2328
10	25	–	35.0	39	14.5	6.5	6.0	14.5	27	6.0	15	13.5	67.5	10	4	25	-30	80	99	22110.2330
with knob and locking – picture 3																				
4	12	–	19.0	22	6.0	3.3	4.0	7.0	14	4.0	8	7.0	33.0	4	3	12	-30	80	15	22110.2344
5	16	–	25.5	28	8.0	4.3	4.5	9.5	18	5.0	10	10.5	43.5	5	5	24	-30	80	30	22110.2345
6	18	–	30.5	32	10.0	5.4	5.0	10.5	21	5.5	12	13.0	52.0	6	5	21	-30	80	48	22110.2346
8	21	–	37.5	34	12.0	5.4	6.0	12.5	23	5.5	12	20.0	63.5	8	6	22	-30	80	68	22110.2348
10	25	–	40.0	39	14.5	6.5	6.0	14.5	27	6.0	15	18.5	72.5	10	4	25	-30	80	109	22110.2350

[1] statistical average value

Compliance

RoHS-compliant
Compliant with Directive 2011/65/EU [RoHS].

Does not contain SVHC substances
No SVHC substances with more than 0.1% w/w contained - SVHC list [REACH] as of 04.02.2026.

SCIP-code
N/A

Does not contain Proposition 65 substances
No Proposition 65 substances included.
https://www.P65Warnings.ca.gov/

Free from Conflict Minerals

POP-compliant
Contains no persistent organic pollutants – Stockholm Convention [POP] as of September 2025.

PFAS-compliant
Contains no per- and polyfluoroalkyl substances (PFAS).

TSCA-compliant
Agent concentration in this product does not exceed the specified threshold.