chanhvinh.com



# Index Plungers Mini Indexes

## EH 22110.



### Product Description

Particularly suitable for screwing into thin walled pieces.
Index plungers are used in indexing bores and serve for secure locking and precise positioning. Components can be reliably positioned or released without the use of additional tools. This enables fast, repeatable positioning and ensures a high level of process reliability.
Index plungers are used wherever components need to be positioned or locked quickly, safely and precisely. Typical applications include mechanical and plant engineering, fixture and tool construction, as well as assembly and production technology. They also ensure smooth operation in transport and packaging systems.
The index plungers series "mini index" consists of versions with particularly compact dimensions.

### Material

**Body**
- Steel, zinc-plated by galvanization
- Stainless steel 1.4305

**Locking pin**
- Stainless steel 1.4305

**Knob**
- Thermoplastic PA 6, black, dull
- Thermoplastic PA 6, red, dull

### Assembly

Screw in the mini index. By lifting the knob, the hexagon will be released for assembly.
The screw length can be adapted by distance collars (EH 22120.).

### Operation

When using the self-locking type the knob is pulled-out, turned 30° and secured by a notched catch.

**More information**

### Notes

Knob not removable.

### Further products

- Distance Collars, for index plungers

## Drawing

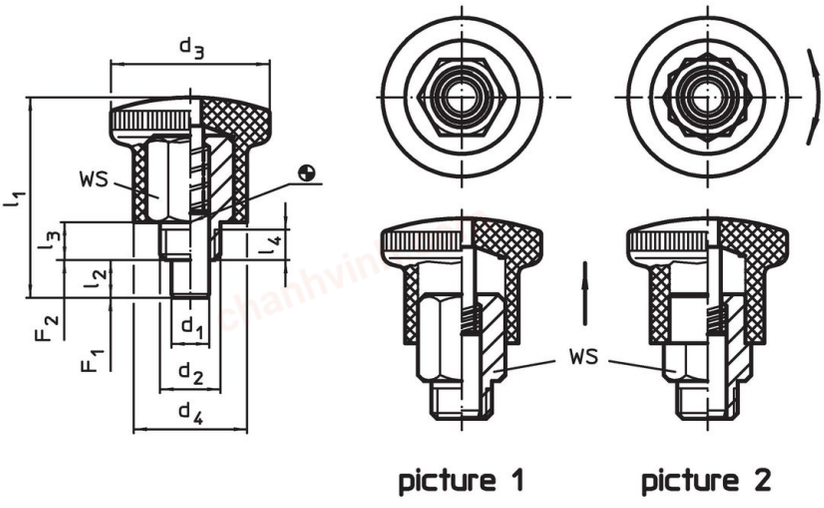


## Order information

| Dimensions | | | | | | | | WS | Spring load[1] | | | | | Art. No. |
|---|---|---|---|---|---|---|---|---|---|---|---|---|---|---|
| $d_1$ 0 -0.06 | $d_2$ | $d_3$ | $d_4$ | $l_1$ | $l_2$ min. | $l_3$ | $l_4$ min. | | $F_1$ ~ | $F_2$ ~ | min. | max. | | |
| [mm] | | | | | | | | [mm] | [N] | | [°C] | | [g] | |
| **without locking, knob black – picture 1, Steel** | | | | | | | | | | | | | | |
| **4** | M 8 x 0,75 | 21 | 15 | 26.5 | 5 | 5 | 3.5 | 10 | 4.5 | 12 | -30 | 80 | 14 | 22110.0024 |
| **5** | M 8 x 0,75 | 21 | 15 | 26.5 | 5 | 5 | 3.5 | 10 | 4.5 | 12 | -30 | 80 | 14 | 22110.0026 |
| **6** | M10 x 1 | 25 | 18 | 34.0 | 7 | 7 | 4.5 | 12 | 5.0 | 18 | -30 | 80 | 25 | 22110.0028 |
| **7** | M10 x 1 | 25 | 18 | 34.0 | 7 | 7 | 4.5 | 12 | 5.0 | 18 | -30 | 80 | 26 | 22110.0030 |

[1] statistical average value

chanhvinh.com



| Dimensions | | | | | | | | WS | Spring load[1] | | | | | Art. No. |
|---|---|---|---|---|---|---|---|---|---|---|---|---|---|---|
| $d_1$ 0 -0.06 | $d_2$ | $d_3$ | $d_4$ | $l_1$ | $l_2$ min. | $l_3$ | $l_4$ min. | | $F_1$ ~ | $F_2$ ~ | min. | max. | | |
| [mm] | | | | | | | | [mm] | [N] | | [°C] | | [g] | |
| **without locking, knob red – picture 1, Steel** | | | | | | | | | | | | | | |
| **4** | M 8 x 0,75 | 21 | 15 | 26.5 | 5 | 5 | 3.5 | 10 | 4.5 | 12 | -30 | 80 | 13 | 22110.2024 |
| **5** | M 8 x 0,75 | 21 | 15 | 26.5 | 5 | 5 | 3.5 | 10 | 4.5 | 12 | -30 | 80 | 16 | 22110.2026 |
| **6** | M10 x 1 | 25 | 18 | 34.0 | 7 | 7 | 4.5 | 12 | 5.0 | 18 | -30 | 80 | 25 | 22110.2028 |
| **7** | M10 x 1 | 25 | 18 | 34.0 | 7 | 7 | 4.5 | 12 | 5.0 | 18 | -30 | 80 | 26 | 22110.2030 |
| **with locking, knob black – picture 2, Steel** | | | | | | | | | | | | | | |
| **4** | M 8 x 0,75 | 21 | 15 | 26.5 | 5 | 5 | 3.5 | 10 | 4.5 | 12 | -30 | 80 | 13 | 22110.0034 |
| **5** | M 8 x 0,75 | 21 | 15 | 26.5 | 5 | 5 | 3.5 | 10 | 4.5 | 12 | -30 | 80 | 14 | 22110.0036 |
| **6** | M10 x 1 | 25 | 18 | 34.0 | 7 | 7 | 4.5 | 12 | 5.0 | 18 | -30 | 80 | 24 | 22110.0038 |
| **7** | M10 x 1 | 25 | 18 | 34.0 | 7 | 7 | 4.5 | 12 | 5.0 | 18 | -30 | 80 | 25 | 22110.0040 |
| **with locking, knob red – picture 2, Steel** | | | | | | | | | | | | | | |
| **4** | M 8 x 0,75 | 21 | 15 | 26.5 | 5 | 5 | 3.5 | 10 | 4.5 | 12 | -30 | 80 | 13 | 22110.2034 |
| **5** | M 8 x 0,75 | 21 | 15 | 26.5 | 5 | 5 | 3.5 | 10 | 4.5 | 12 | -30 | 80 | 14 | 22110.2036 |
| **6** | M10 x 1 | 25 | 18 | 34.0 | 7 | 7 | 4.5 | 12 | 5.0 | 18 | -30 | 80 | 24 | 22110.2038 |
| **7** | M10 x 1 | 25 | 18 | 34.0 | 7 | 7 | 4.5 | 12 | 5.0 | 18 | -30 | 80 | 25 | 22110.2040 |
| **without locking, knob black – picture 1, Stainless steel** | | | | | | | | | | | | | | |
| **4** | M 8 x 0,75 | 21 | 15 | 26.5 | 5 | 5 | 3.5 | 10 | 4.5 | 12 | -30 | 80 | 14 | 22110.0044 |
| **5** | M 8 x 0,75 | 21 | 15 | 26.5 | 5 | 5 | 3.5 | 10 | 4.5 | 12 | -30 | 80 | 14 | 22110.0046 |
| **6** | M10 x 1 | 25 | 18 | 34.0 | 7 | 7 | 4.5 | 12 | 5.0 | 18 | -30 | 80 | 25 | 22110.0048 |
| **7** | M10 x 1 | 25 | 18 | 34.0 | 7 | 7 | 4.5 | 12 | 5.0 | 18 | -30 | 80 | 25 | 22110.0050 |
| **without locking, knob red – picture 1, Stainless steel** | | | | | | | | | | | | | | |
| **4** | M 8 x 0,75 | 21 | 15 | 26.5 | 5 | 5 | 3.5 | 10 | 4.5 | 12 | -30 | 80 | 14 | 22110.2044 |
| **5** | M 8 x 0,75 | 21 | 15 | 26.5 | 5 | 5 | 3.5 | 10 | 4.5 | 12 | -30 | 80 | 14 | 22110.2046 |
| **6** | M10 x 1 | 25 | 18 | 34.0 | 7 | 7 | 4.5 | 12 | 5.0 | 18 | -30 | 80 | 25 | 22110.2048 |
| **7** | M10 x 1 | 25 | 18 | 34.0 | 7 | 7 | 4.5 | 12 | 5.0 | 18 | -30 | 80 | 26 | 22110.2050 |
| **with locking, knob black – picture 2, Stainless steel** | | | | | | | | | | | | | | |
| **4** | M 8 x 0,75 | 21 | 15 | 26.5 | 5 | 5 | 3.5 | 10 | 4.5 | 12 | -30 | 80 | 13 | 22110.0054 |
| **5** | M 8 x 0,75 | 21 | 15 | 26.5 | 5 | 5 | 3.5 | 10 | 4.5 | 12 | -30 | 80 | 14 | 22110.0056 |
| **6** | M10 x 1 | 25 | 18 | 34.0 | 7 | 7 | 4.5 | 12 | 5.0 | 18 | -30 | 80 | 24 | 22110.0058 |
| **7** | M10 x 1 | 25 | 18 | 34.0 | 7 | 7 | 4.5 | 12 | 5.0 | 18 | -30 | 80 | 25 | 22110.0060 |
| **with locking, knob red – picture 2, Stainless steel** | | | | | | | | | | | | | | |
| **4** | M 8 x 0,75 | 21 | 15 | 26.5 | 5 | 5 | 3.5 | 10 | 4.5 | 12 | -30 | 80 | 14 | 22110.2054 |
| **5** | M 8 x 0,75 | 21 | 15 | 26.5 | 5 | 5 | 3.5 | 10 | 4.5 | 12 | -30 | 80 | 14 | 22110.2056 |
| **6** | M10 x 1 | 25 | 18 | 34.0 | 7 | 7 | 4.5 | 12 | 5.0 | 18 | -30 | 80 | 24 | 22110.2058 |
| **7** | M10 x 1 | 25 | 18 | 34.0 | 7 | 7 | 4.5 | 12 | 5.0 | 18 | -30 | 80 | 30 | 22110.2060 |

[1] statistical average value

## Application example





chanhvinh.com



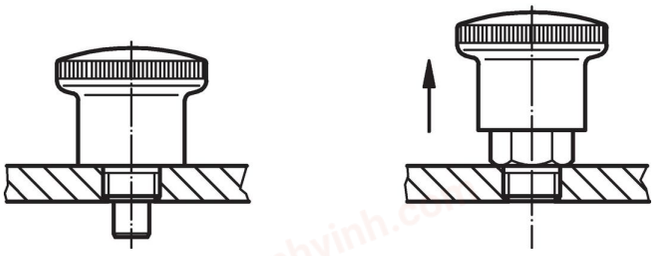

## Compliance

For detailed compliance information please select the desired article number.