chanhvinh.com

Spring Plungers • smooth, long, with collar and ball
EH 22080.



Product Description

Spring plungers can be used for locking as well as for applying or ejecting pressure.
This version has higher spring forces than the standard version "EH 22080. Spring Plungers, smooth, with collar and ball".

Material

Body
- Stainless steel 1.4303

Ball
- Stainless steel, hardened

Spring
- Stainless steel

More information

Notes

Customized design on request.
Spring plungers are specially tested for spring range and spring load.

References

Calculation of indexing resistance, please refer to application example

Further products

- Spring Plungers, smooth, with collar and ball
- Locators, bolt-on, for spring plungers
- Locators, smooth, for spring plungers

Drawing

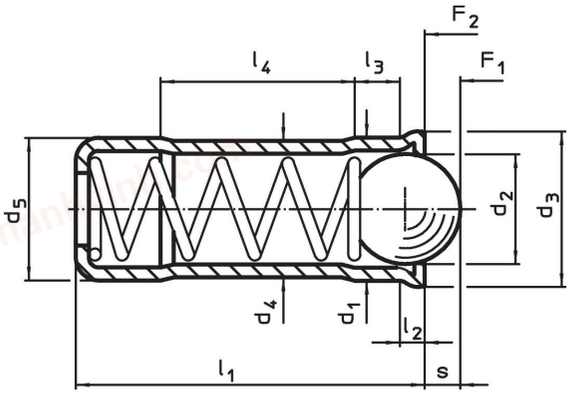

Order information

Dimensions									Stroke	Spring load[1]			Location hole		Art. No.
d_1 +0.1 +0.04	d_2	d_3	d_4	d_5 ±0.04	l_1	l_2 ~	l_3 ~	l_4 ~	s +0.2 -0.1	F_1 ~	F_2 ~	max.	H7		
[mm]									[mm]	[N]		[°C]	[mm]	[g]	
4	3.0	4.6	3.85	4	10.7	0.9	1.8	5.6	0.9	12.9	19.0	250	4	0.6	22080.1104
5	4.0	5.6	4.85	5	12.0	0.9	2.1	6.0	1.3	19.3	29.2	250	5	1.0	22080.1105
6	5.0	6.5	5.85	6	15.0	1.0	2.3	8.2	1.7	28.0	47.5	250	6	1.7	22080.1106
8	6.5	8.5	7.55	8	18.0	1.1	2.9	9.5	2.3	40.0	67.3	250	8	3.6	22080.1108
10	8.5	11.0	9.55	10	26.0	1.5	4.2	14.3	3.1	66.0	105.0	250	10	7.7	22080.1110

[1] statistical average value

chanhvinh.com

Application example

CALCULATION OF THE INDEXING RESISTANCE

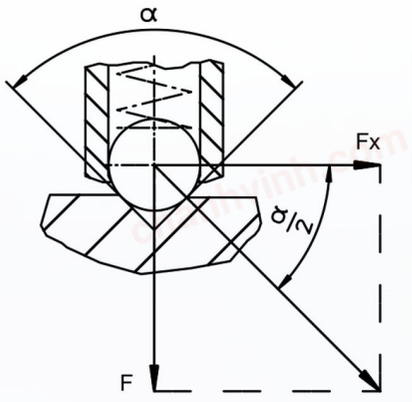

Sample calculation for:
α = 60°, Fx = 1,732 x F
α = 90°, Fx = F
α = 120°, Fx = 0,577 x F

$$Fx = \frac{F}{\tan \frac{\alpha}{2}}$$

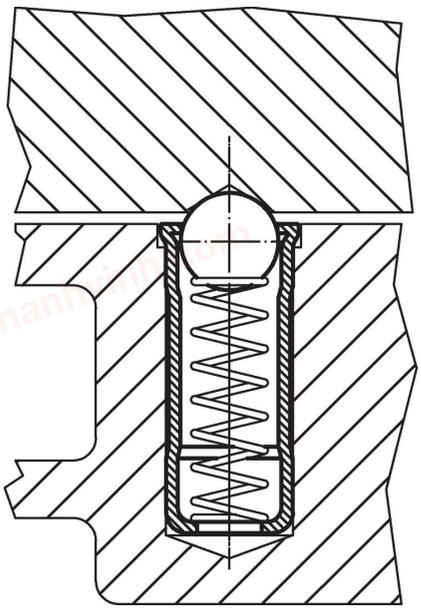

chanhvinh.com

Compliance

RoHS-compliant
Compliant with Directive 2011/65/EU [RoHS].

Does not contain SVHC substances
No SVHC substances with more than 0.1% w/w contained - SVHC list [REACH] as of 04.02.2026.

SCIP-code
N/A

Does not contain Proposition 65 substances
No Proposition 65 substances included.
https://www.P65Warnings.ca.gov/

Free from Conflict Minerals
This product does not contain any substances designated as "conflict minerals" such as tantalum, tin, gold or tungsten from the Democratic Republic of Congo or adjacent countries.

POP-compliant
Contains no persistent organic pollutants – Stockholm Convention [POP] as of September 2025.

PFAS-compliant
Contains no per- and polyfluoroalkyl substances (PFAS).

TSCA-compliant
Agent concentration in this product does not exceed the specified threshold.