chanhvinh.com

Spring Plungers • smooth, without collar
EH 22080.



Product Description

Spring plungers can be used for locking as well as for applying or ejecting pressure.

Material

Body
- Stainless steel 1.4305

Ball
- Stainless steel, hardened

Spring
- Stainless steel

Assembly

The locating hole has to be adapted to each individual application case. For transition fits, we recommend an F8 fit; for press fits, an H9 fit.

More information

Notes

Customized design on request.
Spring plungers are specially tested for spring range and spring load.

References

Calculation of indexing resistance, please refer to application example

Further products

- Spring Plungers, smooth, without collar, with moveable ball
- Locators, bolt-on, for spring plungers
- Locators, smooth, for spring plungers

Drawing

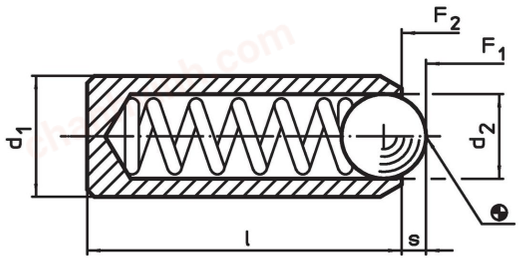

Order information

Dimensions			Stroke	Spring load[1]			Location hole transition fit F8 / press fit H9		Art. No.
d_1 ±0.04	d_2	l	s	F_1 ~	F_2 ~	max.			
[mm]			[mm]	[N]		[°C]	[mm]	[g]	
stainless steel, standard spring load									
2.0	1.0	3.5	0.30	0.8	1.5	250	2.0	0.1	22080.0306
2.5	1.5	5.0	0.40	2.8	4.7	250	2.5	0.1	22080.0308
3.0	2.0	7.0	0.65	4.5	7.5	250	3.0	0.3	22080.0310
3.5	2.5	9.0	0.80	8.5	14.0	250	3.5	0.5	22080.0312
4.0	3.0	11.0	0.90	8.0	14.0	250	4.0	0.7	22080.0315
4.5	3.2	12.0	0.95	9.5	16.5	250	4.5	1.0	22080.0317
5.0	3.5	13.0	1.00	11.0	18.0	250	5.0	1.4	22080.0320
5.5	4.0	14.0	1.20	15.5	25.0	250	5.5	1.8	22080.0322
6.0	4.5	15.0	1.50	18.0	31.0	250	6.0	2.3	22080.0325
8.0	6.0	18.0	2.00	24.0	45.0	250	8.0	5.0	22080.0327
10.0	8.0	20.0	2.50	26.0	49.0	250	10.0	8.3	22080.0330
12.0	10.0	22.0	3.50	41.0	86.0	250	12.0	12.0	22080.0332
stainless steel, heavy spring load									
2.0	1.0	3.5	0.30	1.3	2.2	250	2.0	0.1	22080.0356
2.5	1.5	5.0	2.50	4.7	7.1	250	2.5	0.2	22080.0358
3.0	2.0	7.0	0.65	7.8	11.6	250	3.0	0.3	22080.0360

[1] statistical average value

chanhvinh.com

Dimensions			Stroke	Spring load[1]			Location hole transition fit F8 / press fit H9		Art. No.
d_1 ±0.04	d_2	l	s	F_1 ~	F_2 ~	max.			
[mm]			[mm]	[N]		[°C]	[mm]	[g]	
3.5	2.5	9.0	0.80	12.0	18.0	250	3.5	0.5	22080.0362
4.0	3.0	11.0	0.90	15.0	22.0	250	4.0	0.7	22080.0365
4.5	3.2	12.0	0.95	18.7	25.1	250	4.5	1.0	22080.0367
5.0	3.5	13.0	1.00	19.3	26.6	250	5.0	1.4	22080.0370
5.5	4.0	14.0	1.20	25.1	39.2	250	5.5	1.8	22080.0372
6.0	4.5	15.0	1.50	36.0	60.5	250	6.0	2.3	22080.0375
8.0	6.0	18.0	2.00	57.0	103.5	250	8.0	5.1	22080.0377
10.0	8.0	20.0	2.50	61.0	110.0	250	10.0	8.5	22080.0380
12.0	10.0	22.0	3.50	68.0	143.0	250	12.0	13.0	22080.0382

[1] statistical average value

Application example

CALCULATION OF THE INDEXING RESISTANCE

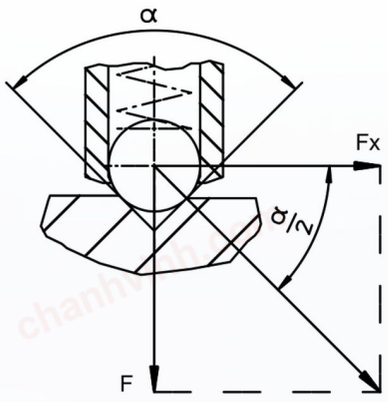

Sample calculation for:
α = 60°, Fx = 1,732 x F
α = 90°, Fx = F
α = 120°, Fx = 0,577 x F

$$Fx = \frac{F}{\tan \frac{\alpha}{2}}$$

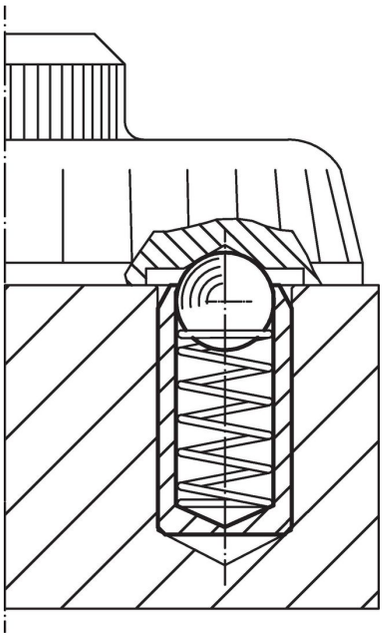

chanhvinh.com

Compliance

RoHS-compliant
Compliant with Directive 2011/65/EU [RoHS].

Does not contain SVHC substances
No SVHC substances with more than 0.1% w/w contained - SVHC list [REACH] as of 04.02.2026.

SCIP-code
N/A

Does not contain Proposition 65 substances
No Proposition 65 substances included.
https://www.P65Warnings.ca.gov/

Free from Conflict Minerals
This product does not contain any substances designated as "conflict minerals" such as tantalum, tin, gold or tungsten from the Democratic Republic of Congo or adjacent countries.

POP-compliant
Contains no persistent organic pollutants – Stockholm Convention [POP] as of September 2025.

PFAS-compliant
Contains no per- and polyfluoroalkyl substances (PFAS).

TSCA-compliant
Agent concentration in this product does not exceed the specified threshold.