chanhvinh.com

Spring Plungers • smooth, with collar and ball
EH 22080.



Product Description

Spring plungers smooth, with collar and ball can be used for positioning, locking, resting, pressing and fixing of components.
They are suitable for applications where a defined spring force is required while ensuring gentle contact with the mating surface.
Typical applications include recurring positioning and retention functions in mechanical assemblies and technical components.
The spring plunger consists of a smooth body with an integrated spring-loaded ball.
The preloaded compression spring generates a defined axial spring force, which is transmitted to the mating component via the ball. When the ball is depressed, the spring is compressed and stores mechanical energy. After the load is released, the spring automatically and repeatedly returns the ball to its initial position. The ball is securely retained within the sleeve and designed to be captive.
These spring plungers are characterised by the following features:

- Suitable for applications that require a flat surface when screwed in
- Body with collar for a defined screw-in depth
- Smooth body for quick installation.
- Compact design for confined installation spaces
- The brass version is non-magnetic
- Tested and defined spring force for repeatable positioning and locking
- Ball securely retained and designed to be captive
- High wear resistance due to hardened ball design

Material

Body

- Stainless steel 1.4303
- Brass
- Thermoplastic POM, blue
- Thermoplastic POM, black
- Thermoplastic POM, white

Ball

- Stainless steel, hardened
- Thermoplastic POM, white
- Thermoplastic POM, black

Spring

- Stainless steel

Assembly

A tolerance of H7 is recommended for the locating hole of d_1.

More information

Notes

Customized design on request.
Spring plungers are specially tested for spring range and spring load.

References

Calculation of indexing resistance, please refer to application example
Version with higher spring forces see "EH 22080. Spring Plungers, smooth, long, with collar and ball".

Further products

- Spring Plungers, with collar and ball, front slot
- Spring Plungers, smooth, long, with collar and ball
- Spring Plungers, smooth, with collar and ball, self-clamping
- Locators, bolt-on, for spring plungers
- Locators, smooth, for spring plungers
- Holders, for spring plungers

Drawing

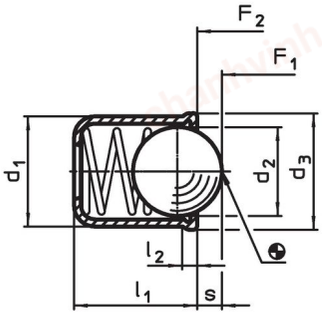

picture 1

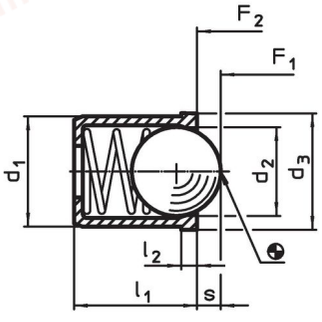

picture 2

chanhvinh.com

Order information

Dimensions					Stroke	Spring load[1]				Location hole		Art. No.
d_1 +0.1	d_2	d_3	l_1	l_2 ~	s	F_1 ~	F_2 ~	min.	max.	H7		
[mm]					[mm]	[N]		[°C]		[mm]	[g]	
body and ball from stainless steel, light spring load – picture 1												
3	2.38	3.5	4.0	0.6	0.70	0.4	1.3	–	250	3	0.1	22080.1003
4	3.00	4.6	5.0	0.9	1.00	0.4	1.0	–	250	4	0.3	22080.1004
5	4.00	5.6	6.0	0.9	1.40	0.5	4.7	–	250	5	0.6	22080.1005
6	5.00	6.5	7.0	1.0	1.80	2.3	6.5	–	250	6	1.0	22080.1006
8	6.50	8.5	9.0	1.1	2.40	4.0	9.0	–	250	8	2.1	22080.1008
10	8.50	11.0	13.0	1.5	3.30	3.9	10.0	–	250	10	4.4	22080.1010
12	10.00	13.0	16.0	2.3	4.00	6.2	14.6	–	250	12	7.1	22080.1012
body and ball from stainless steel, standard spring load – picture 1												
3	2.38	3.5	4.0	0.6	0.70	1.8	3.5	–	250	3	0.2	22080.0003
4	3.00	4.6	5.0	0.9	1.00	2.5	6.0	–	250	4	0.3	22080.0004
5	4.00	5.6	6.0	0.9	1.40	3.0	6.5	–	250	5	0.6	22080.0005
6	5.00	6.5	7.0	1.0	1.80	5.5	11.5	–	250	6	1.0	22080.0006
8	6.50	8.5	9.0	1.1	2.40	7.0	12.5	–	250	8	2.1	22080.0008
10	8.50	11.0	13.0	1.5	3.30	8.5	18.5	–	250	10	4.4	22080.0010
12	10.00	13.0	16.0	2.3	4.00	12.0	26.5	–	250	12	7.2	22080.0012
body and ball from stainless steel, heavy spring load – picture 1												
3	2.38	3.5	4.0	0.6	0.70	2.4	5.5	–	250	3	0.2	22080.2003
4	3.00	4.6	5.0	0.9	1.00	5.0	10.4	–	250	4	0.3	22080.2004
5	4.00	5.6	6.0	0.9	1.40	6.0	12.0	–	250	5	0.6	22080.2005
6	5.00	6.5	7.0	1.0	1.80	7.3	19.0	–	250	6	1.0	22080.2006
8	6.50	8.5	9.0	1.1	2.40	11.0	25.0	–	250	8	2.1	22080.2008
10	8.50	11.0	13.0	1.5	3.30	17.0	37.0	–	250	10	4.5	22080.2010
12	10.00	13.0	16.0	2.3	4.00	28.0	57.0	–	250	12	7.5	22080.2012
body from brass, ball from stainless steel, standard spring load – picture 2												
3	2.38	3.6	4.0	0.6	0.60	1.8	3.5	–	250	3	0.2	22080.0203
4	3.00	4.5	5.0	1.0	0.80	3.0	6.0	–	250	4	0.4	22080.0204
5	4.00	5.5	6.0	1.0	1.00	4.0	6.5	–	250	5	0.7	22080.0205
6	5.00	6.5	7.0	1.0	1.60	6.0	11.5	–	250	6	1.2	22080.0206
8	6.50	8.5	9.0	1.0	1.90	8.0	12.5	–	250	8	2.8	22080.0208
body from thermoplastic, blue, ball from stainless steel, standard spring load – picture 2												
3	2.00	3.6	4.0	0.6	0.55	1.7	3.5	-30	50	3	0.1	22080.0403
4	3.00	4.6	5.0	1.0	0.80	3.0	6.5	-30	50	4	0.2	22080.0404
5	4.00	5.6	6.0	1.0	1.00	6.0	9.4	-30	50	5	0.4	22080.0405
6	5.00	6.5	7.0	1.0	1.60	6.2	12.6	-30	50	6	0.7	22080.0406
8	6.50	8.5	9.0	1.0	1.90	10.0	20.4	-30	50	8	1.5	22080.0408
10	8.00	11.0	13.5	1.5	2.40	11.9	22.3	-30	50	10	3.1	22080.0410
12	10.00	13.0	16.0	1.5	3.30	14.0	25.0	-30	50	12	5.7	22080.0412
body from thermoplastic, blue, ball from thermoplastic, white, standard spring load – picture 2												
4	3.00	4.6	5.0	1.0	0.80	3.0	6.5	-30	50	4	0.1	22080.0604
5	4.00	5.6	6.0	1.0	1.00	6.0	9.4	-30	50	5	0.2	22080.0605
6	5.00	6.5	7.0	1.0	1.60	6.2	12.6	-30	50	6	0.2	22080.0606
8	6.50	8.5	9.0	1.0	1.90	10.0	20.4	-30	50	8	0.6	22080.0608
10	8.00	11.0	13.5	1.5	2.40	11.9	22.3	-30	50	10	1.4	22080.0610
12	10.00	13.0	16.0	1.5	3.30	14.0	25.0	-30	50	12	2.4	22080.0612
body from thermoplastic, black, ball from stainless steel, standard spring load – picture 2												
4	3.00	4.6	5.0	1.0	0.80	3.0	6.5	-30	50	4	0.2	22080.3004
5	4.00	5.6	6.0	1.0	1.00	6.0	9.4	-30	50	5	0.4	22080.3005
6	5.00	6.5	7.0	1.0	1.60	6.2	12.6	-30	50	6	0.7	22080.3006
8	6.50	8.5	9.0	1.0	1.90	10.0	20.4	-30	50	8	1.5	22080.3008
10	8.00	11.0	13.5	1.5	2.40	11.9	22.3	-30	50	10	3.1	22080.3010
12	10.00	13.0	16.0	1.5	3.30	14.0	25.0	-30	50	12	5.7	22080.3012

[1] statistical average value

chanhvinh.com

Dimensions					Stroke	Spring load[1]				Location hole		Art. No.
d_1 +0.1	d_2	d_3	l_1	l_2 ~	s	F_1 ~	F_2 ~	min.	max.	H7		
[mm]					[mm]	[N]		[°C]		[mm]	[g]	
body from thermoplastic, black, ball from thermoplastic, white, standard spring load – picture 2												
4	3.00	4.6	5.0	1.0	0.80	3.0	6.5	-30	50	4	0.1	22080.3104
5	4.00	5.6	6.0	1.0	1.00	6.0	9.4	-30	50	5	0.2	22080.3105
6	5.00	6.5	7.0	1.0	1.60	6.2	12.6	-30	50	6	0.3	22080.3106
8	6.50	8.5	9.0	1.0	9.10	10.0	20.4	-30	50	8	0.6	22080.3108
10	8.00	11.0	13.5	1.5	2.40	11.9	22.3	-30	50	10	1.4	22080.3110
12	10.00	13.0	16.0	1.5	3.30	14.0	25.0	-30	50	12	2.4	22080.3112
body and ball from thermoplastic, black, standard spring load – picture 2												
4	3.00	4.6	5.0	1.0	0.80	3.0	6.5	-30	50	4	0.1	22080.3204
5	4.00	5.6	6.0	1.0	1.00	6.0	9.4	-30	50	5	0.2	22080.3205
6	5.00	6.5	7.0	1.0	1.60	6.2	12.6	-30	50	6	0.3	22080.3206
8	6.50	8.5	9.0	1.0	1.90	10.0	20.4	-30	50	8	0.6	22080.3208
10	8.00	11.0	13.5	1.5	2.40	11.9	22.3	-30	50	10	1.4	22080.3210
12	10.00	13.0	16.0	1.5	3.30	14.0	25.0	-30	50	12	2.4	22080.3212
body from thermoplastic, white, ball from stainless steel, standard spring load – picture 2												
4	3.00	4.6	5.0	1.0	0.80	3.0	6.5	-30	50	4	0.2	22080.4004
5	4.00	5.6	6.0	1.0	1.00	6.0	9.4	-30	50	5	0.4	22080.4005
6	5.00	6.5	7.0	1.0	1.60	6.2	12.6	-30	50	6	0.7	22080.4006
8	6.50	8.5	9.0	1.0	1.90	10.0	20.4	-30	50	8	1.5	22080.4008
10	8.00	11.0	13.5	1.5	2.40	11.9	22.3	-30	50	10	3.0	22080.4010
12	10.00	13.0	16.0	1.5	3.30	14.0	25.0	-30	50	12	5.6	22080.4012
body and ball from thermoplastic, white, standard spring load – picture 2												
4	3.00	4.6	5.0	1.0	0.80	3.0	6.5	-30	50	4	0.1	22080.4104
5	4.00	5.6	6.0	1.0	1.00	6.0	9.4	-30	50	5	0.2	22080.4105
6	5.00	6.5	7.0	1.0	1.60	6.2	12.6	-30	50	6	0.2	22080.4106
8	6.50	8.5	9.0	1.0	1.90	10.0	20.4	-30	50	8	0.6	22080.4108
10	8.00	11.0	13.5	1.5	2.40	11.9	22.3	-30	50	10	1.4	22080.4110
12	10.00	13.0	16.0	1.5	3.30	14.0	25.0	-30	50	12	2.4	22080.4112

[1] statistical average value

Application example

CALCULATION OF THE INDEXING RESISTANCE

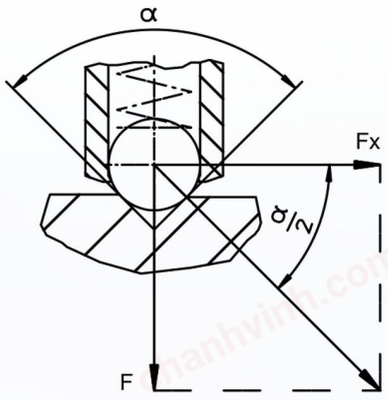

Sample calculation for:
α = 60°, Fx = 1,732 x F
α = 90°, Fx = F
α = 120°, Fx = 0,577 x F

$$Fx = \frac{F}{\tan \frac{\alpha}{2}}$$

chanhvinh.com

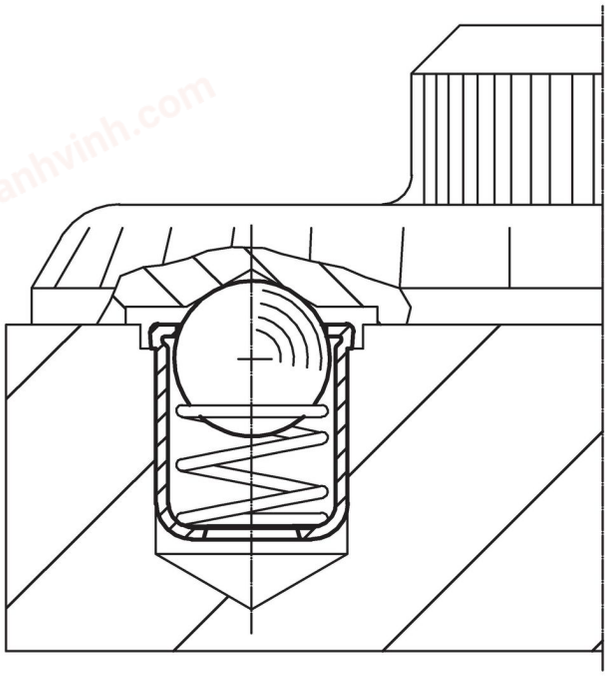

Compliance

For detailed compliance information please select the desired article number.