chanhvinh.com



# **Spring Plungers** • with collar and ball, front slot
EH 22075.



## Product Description

Spring plungers with collar and ball, front slot can be used for positioning, locking, resting, pressing and fixing of components.
They are suitable for applications where a defined spring force is required while ensuring gentle contact with the mating surface.
Thanks to the plastic body and the ball – optionally available in plastic or stainless steel – these spring plungers offer a cost-effective solution for a wide range of applications.
Compared to fully metallic versions, their lower weight provides a design advantage.
Typical applications include recurring positioning and retention functions in mechanical assemblies and technical components.
The spring plunger consists of a threaded sleeve with an integrated spring-loaded ball.
The preloaded compression spring generates a defined axial spring force, which is transmitted to the mating component via the ball. When the ball is depressed, the spring is compressed and stores mechanical energy. After the load is released, the spring automatically and repeatedly returns the ball to its initial position. The ball is securely retained within the sleeve and designed to be captive.
These spring plungers are characterised by the following features:
- Suitable for applications that require a flat surface when screwed in
- Threaded body with collar for a defined screw-in depth
- Front slot for installation and adjustment from the front end
- Compact design for confined installation spaces
- Tested and defined spring force for repeatable positioning and locking
- Ball securely retained and designed to be captive
- High wear resistance due to hardened ball design

### Material

**Body**
- Free cutting steel, blackened
- Stainless steel 1.4305
- Thermoplastic POM, blue
- Thermoplastic POM, black

**Ball**
- Stainless steel, hardened
- Thermoplastic POM, white
- Thermoplastic POM, black

**Spring**
- Stainless steel

### More information

#### Notes

Customized design on request.
Spring plungers are specially tested for spring range and spring load.

#### References

Thread lock on request.
Calculation of indexing resistance, please refer to application example

#### Further products

- Spring Plungers, smooth, with collar and ball
- Locators, bolt-on, for spring plungers
- Locators, smooth, for spring plungers

## Drawing

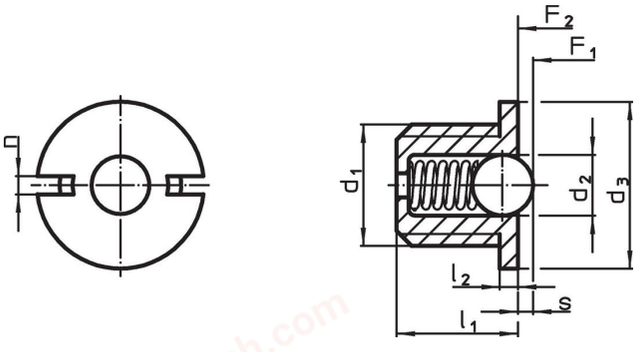

chanhvinh.com



## Order information

| Dimensions | | | | | | Stroke | Spring load[1] | | | | | Art. No. |
|---|---|---|---|---|---|---|---|---|---|---|---|---|
| $d_1$ | $l_1$ | $d_2$ | $d_3$ -0.1 | $l_2$ -0.1 | n | s +0.1 -0.1 | $F_1$ ~ | $F_2$ ~ | min. | max. | | |
| [mm] | | | | | | [mm] | [N] | | [°C] | | [g] | |
| **body from free cutting steel, ball from stainless steel, standard spring load** | | | | | | | | | | | | |
| **M 4** | **4.0** | 2.00 | 5.5 | 0.6 | 0.6 | 0.6 | 1.7 | 3.9 | – | 250 | 0.3 | 22075.0004 |
| **M 5** | **5.0** | 3.00 | 7.0 | 0.8 | 1.2 | 0.8 | 2.9 | 4.5 | – | 250 | 0.5 | 22075.0005 |
| **M 6** | **6.0** | 3.50 | 8.0 | 1.0 | 1.3 | 1.0 | 3.6 | 8.7 | – | 250 | 0.9 | 22075.0006 |
| **M 8** | **7.0** | 5.00 | 10.0 | 1.5 | 1.5 | 1.6 | 5.4 | 10.2 | – | 250 | 1.9 | 22075.0008 |
| **M10** | **9.0** | 6.35 | 12.0 | 1.5 | 1.5 | 1.9 | 7.4 | 17.5 | – | 250 | 3.5 | 22075.0010 |
| **M12** | **11.5** | 8.00 | 14.0 | 1.5 | 2.7 | 2.4 | 10.8 | 22.3 | – | 250 | 6.0 | 22075.0012 |
| **body and ball from stainless steel, standard spring load** | | | | | | | | | | | | |
| **M 4** | **4.0** | 2.00 | 5.5 | 0.6 | 0.6 | 0.6 | 1.7 | 3.9 | – | 250 | 0.3 | 22075.0404 |
| **M 5** | **5.0** | 3.00 | 7.0 | 0.8 | 1.2 | 0.8 | 2.9 | 4.5 | – | 250 | 0.5 | 22075.0405 |
| **M 6** | **6.0** | 3.50 | 8.0 | 1.0 | 1.3 | 1.0 | 3.6 | 8.7 | – | 250 | 0.9 | 22075.0406 |
| **M 8** | **7.0** | 5.00 | 10.0 | 1.5 | 1.5 | 1.6 | 5.4 | 10.2 | – | 250 | 1.9 | 22075.0408 |
| **M10** | **9.0** | 6.35 | 12.0 | 1.5 | 1.5 | 1.9 | 7.4 | 17.5 | – | 250 | 3.7 | 22075.0410 |
| **M12** | **11.5** | 8.00 | 14.0 | 1.5 | 2.7 | 2.4 | 10.8 | 22.3 | – | 250 | 6.1 | 22075.0412 |
| **body from thermoplastic, blue, ball from stainless steel, standard spring load** | | | | | | | | | | | | |
| **M 4** | **4.0** | 2.00 | 5.5 | 0.6 | 0.6 | 0.5 | 2.1 | 3.9 | -30 | 50 | 0.1 | 22075.0604 |
| **M 5** | **5.0** | 3.00 | 7.0 | 0.8 | 1.2 | 0.7 | 3.2 | 4.5 | -30 | 50 | 0.2 | 22075.0605 |
| **M 6** | **6.0** | 3.50 | 8.0 | 1.0 | 1.3 | 0.9 | 4.1 | 8.7 | -30 | 50 | 0.3 | 22075.0606 |
| **M 8** | **7.0** | 5.00 | 10.0 | 1.5 | 1.5 | 1.5 | 5.7 | 10.2 | -30 | 50 | 0.8 | 22075.0608 |
| **M10** | **9.0** | 6.50 | 12.0 | 1.5 | 1.5 | 1.9 | 9.2 | 17.2 | -30 | 50 | 1.7 | 22075.0610 |
| **M12** | **11.5** | 8.00 | 14.0 | 1.5 | 2.7 | 2.3 | 11.2 | 22.3 | -30 | 50 | 3.1 | 22075.0612 |
| **body from thermoplastic, black, ball from stainless steel, standard spring load** | | | | | | | | | | | | |
| **M 4** | **4.0** | 3.00 | 5.5 | 0.6 | 0.6 | 0.5 | 2.1 | 3.9 | -30 | 50 | 0.1 | 22075.0704 |
| **M 5** | **5.0** | 3.00 | 7.0 | 0.8 | 1.2 | 0.7 | 3.2 | 4.5 | -30 | 50 | 0.2 | 22075.0705 |
| **M 6** | **6.0** | 3.50 | 8.0 | 1.0 | 1.3 | 0.9 | 4.1 | 8.7 | -30 | 50 | 0.3 | 22075.0706 |
| **M 8** | **7.0** | 5.00 | 10.0 | 1.5 | 1.5 | 1.5 | 5.7 | 10.2 | -30 | 50 | 0.8 | 22075.0708 |
| **M10** | **9.0** | 6.50 | 12.0 | 1.5 | 1.5 | 1.9 | 9.2 | 17.2 | -30 | 50 | 1.7 | 22075.0710 |
| **M12** | **11.5** | 8.00 | 14.0 | 1.5 | 2.7 | 2.3 | 11.2 | 22.3 | -30 | 50 | 3.1 | 22075.0712 |
| **body from thermoplastic, blue, ball from thermoplastic, white, standard spring load** | | | | | | | | | | | | |
| **M 4** | **4.0** | 2.00 | 5.5 | 0.6 | 0.6 | 0.5 | 2.1 | 3.9 | -30 | 50 | 0.1 | 22075.0804 |
| **M 5** | **5.0** | 3.00 | 7.0 | 0.8 | 1.2 | 0.7 | 3.2 | 4.5 | -30 | 50 | 0.1 | 22075.0805 |
| **M 6** | **6.0** | 3.50 | 8.0 | 1.0 | 1.3 | 0.9 | 4.1 | 8.7 | -30 | 50 | 0.2 | 22075.0806 |
| **M 8** | **7.0** | 5.00 | 10.0 | 1.5 | 1.5 | 1.5 | 5.7 | 10.2 | -30 | 50 | 0.4 | 22075.0808 |
| **M10** | **9.0** | 6.50 | 12.0 | 1.5 | 1.5 | 1.9 | 9.2 | 17.2 | -30 | 50 | 0.8 | 22075.0810 |
| **M12** | **11.5** | 8.00 | 14.0 | 1.5 | 2.7 | 2.3 | 11.2 | 22.3 | -30 | 50 | 1.3 | 22075.0812 |
| **body and ball from thermoplastic, black, standard spring load** | | | | | | | | | | | | |
| **M 4** | **4.0** | 3.00 | 5.5 | 0.6 | 0.6 | 0.5 | 2.1 | 3.9 | -30 | 50 | 0.1 | 22075.1004 |
| **M 5** | **5.0** | 3.00 | 7.0 | 0.8 | 1.2 | 0.7 | 3.2 | 4.5 | -30 | 50 | 0.1 | 22075.1005 |
| **M 6** | **6.0** | 3.50 | 8.0 | 1.0 | 1.3 | 0.9 | 4.1 | 8.7 | -30 | 50 | 0.2 | 22075.1006 |
| **M 8** | **7.0** | 5.00 | 10.0 | 1.5 | 1.5 | 1.5 | 5.7 | 10.2 | -30 | 50 | 0.4 | 22075.1008 |
| **M10** | **9.0** | 6.50 | 12.0 | 1.5 | 1.5 | 1.9 | 9.2 | 17.2 | -30 | 50 | 0.8 | 22075.1010 |
| **M12** | **11.5** | 8.00 | 14.0 | 1.5 | 2.7 | 2.3 | 11.2 | 22.3 | -30 | 50 | 1.3 | 22075.1012 |

[1] statistical average value

chanhvinh.com



## Accessories

| | Dimensions | | | | | Art. No. |
|---|---|---|---|---|---|---|
| | $d_1$ | b | d | l | [g] | |
| **assembly tool** | | | | | | |
| 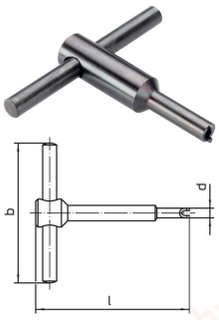 | **M 4** | 50 | 5.2 | 55 | 20 | 22075.0904 |
| | **M 5** | 50 | 6.7 | 55 | 24 | 22075.0905 |
| | **M 6** | 50 | 7.7 | 60 | 30 | 22075.0906 |
| | **M 8** | 60 | 9.7 | 60 | 47 | 22075.0908 |
| | **M10** | 60 | 11.7 | 70 | 72 | 22075.0910 |
| | **M12** | 80 | 13.7 | 80 | 127 | 22075.0912 |

## Application example





### CALCULATION OF THE INDEXING RESISTANCE

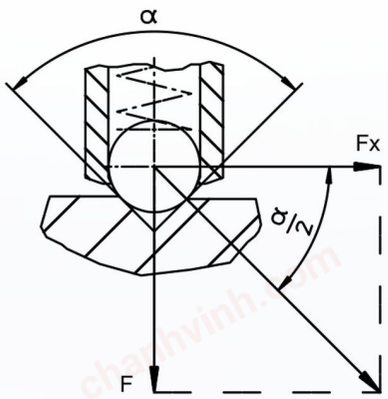


Sample calculation for:
α = 60°, Fx = 1,732 x F
α = 90°, Fx = F
α = 120°, Fx = 0,577 x F

$$Fx = \frac{F}{\tan \frac{\alpha}{2}}$$

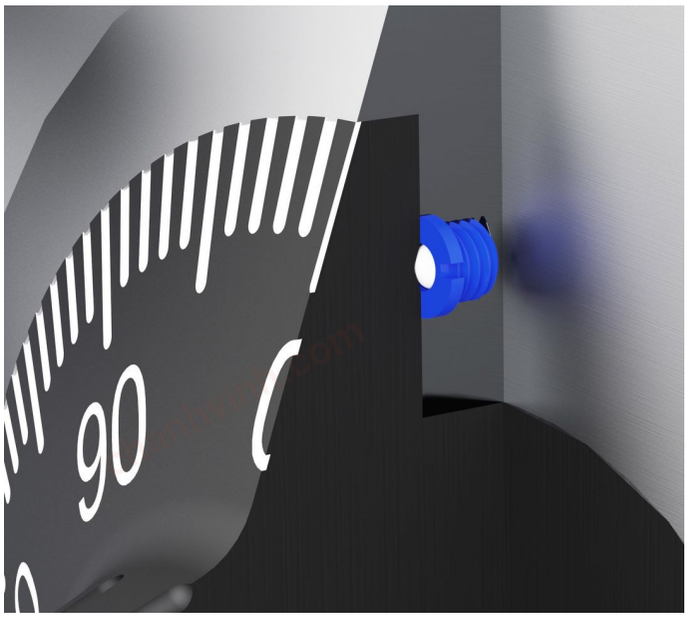

chanhvinh.com



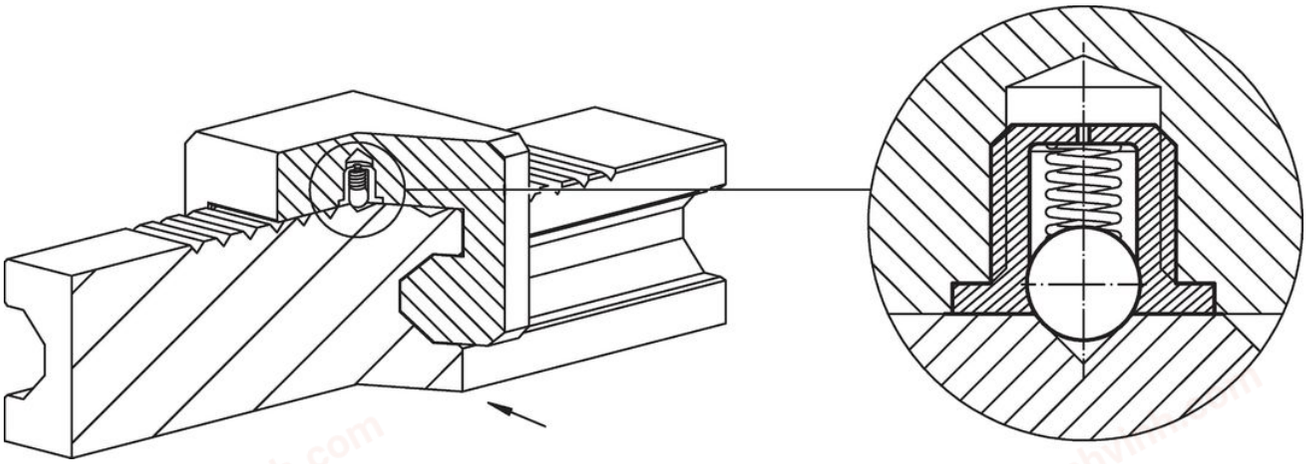

## Compliance

For detailed compliance information please select the desired article number.