chanhvinh.com

Spring Plungers • long version
EH 22070.



Product Description

Can be used as an ejector, for applying or ejecting pressure, and as a damping element.

Material

Pin
- Steel, case-hardened, black
- Stainless Steel 1.4305, nitrided

Body
- Free cutting steel, blackened
- Stainless steel 1.4305
- Heat-treated steel, tempered, blackened

Spring
- Stainless steel

Assembly

Mounting and dismantling possible using an internal hexagon or slot.
Please use a special assembly tool for mounting with a slot (pin side).

Characteristic

Heavy spring load: two longitudinal markings
The marking of the spring load is deleted for all production batches starting from Q2/2025.
Standard spring load: no marking

More information

Notes

Customized design on request.
Spring plungers are specially tested for spring range and spring load.

References

Thread lock: polyamide all-arround coating (for details please refer to the technical appendix).

Drawing

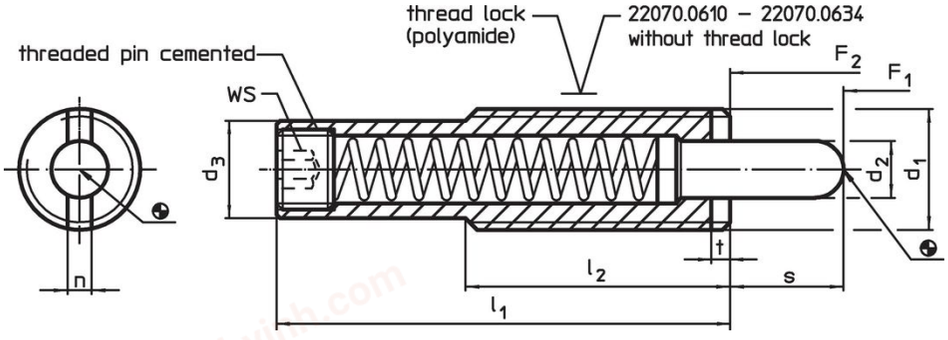

Order information

Dimensions							Stroke	WS	Spring load[1]				Art. No.
d_1	l_1	d_2	d_3	l_2	n	t	s		F_1 ~	F_2 ~	min.	max.	
[mm]							[mm]	[mm]	[N]		[°C]		[g]	
body from free cutting steel, standard spring load, with thread lock														
M10	**35**	4.0	7.8	25	1.5	1.4	**8**	3	6	16	-30	90	13	22070.0408
M12	**43**	5.5	9.5	35	2.7	2.0	**10**	4	4	18	-30	90	22	22070.0412
M16	**48**	8.0	13.4	35	3.2	3.0	**10**	6	7	24	-30	90	47	22070.0430
M16	**58**	8.0	13.4	35	3.2	3.0	**10**	6	15	42	-30	90	53	22070.0432
M16	**58**	8.0	13.4	35	3.2	3.0	**15**	6	9	33	-30	90	54	22070.0436
M16	**58**	8.0	13.4	35	3.2	3.0	**20**	6	4	23	-30	90	55	22070.0440
M16	**83**	8.0	13.4	35	3.2	3.0	**20**	6	11	43	-30	90	69	22070.0442
M16	**98**	8.0	13.4	35	3.2	3.0	**25**	6	13	41	-30	90	82	22070.0444
M16	**98**	8.0	13.4	35	3.2	3.0	**30**	6	13	47	-30	90	83	22070.0450
M16	**118**	8.0	13.4	35	3.2	3.0	**30**	6	24	110	-30	90	97	22070.0452
M16	**148**	8.0	13.4	35	3.2	3.0	**40**	6	13	63	-30	90	118	22070.0455
M16	**148**	8.0	13.4	35	3.2	3.0	**50**	6	7	43	-30	90	118	22070.0460
M24	**60**	10.0	19.6	45	3.7	3.0	**15**	8	14	87	-30	90	133	22070.0480

[1] statistical average value

chanhvinh.com

Dimensions							Stroke	WS	Spring load[1]				Art. No.
d_1	l_1	d_2	d_3	l_2	n	t	s		F_1 ~	F_2 ~	min.	max.	
[mm]							[mm]	[mm]	[N]		[°C]		[g]	
stainless steel, standard spring load, with thread lock														
M10	**35**	4.0	7.8	25	1.5	1.4	**8**	3	6	16	-30	90	13	22070.0208
M12	**43**	5.5	9.5	35	2.7	2.0	**10**	4	4	18	-30	90	23	22070.0212
M16	**48**	8.0	13.4	35	3.2	3.0	**10**	6	7	24	-30	90	47	22070.0230
M16	**58**	8.0	13.4	35	3.2	3.0	**15**	6	9	33	-30	90	54	22070.0236
M16	**58**	8.0	13.4	35	3.2	3.0	**20**	6	4	23	-30	90	55	22070.0240
M16	**98**	8.0	13.4	35	3.2	3.0	**25**	6	13	41	-30	90	82	22070.0244
M16	**98**	8.0	13.4	35	3.2	3.0	**30**	6	13	47	-30	90	84	22070.0250
M16	**148**	8.0	13.4	35	3.2	3.0	**40**	6	13	63	-30	90	118	22070.0255
M16	**148**	8.0	13.4	35	3.2	3.0	**50**	6	7	43	-30	90	119	22070.0260
M24	**60**	10.0	19.6	45	3.7	3.0	**15**	8	14	87	-30	90	134	22070.0280
body from free cutting steel, heavy spring load, with thread lock														
M10	**35**	4.0	7.8	25	1.5	1.4	**8**	3	12	22	-30	90	13	22070.0508
M12	**43**	5.5	9.5	35	2.7	2.0	**10**	4	7	46	-30	90	22	22070.0512
M16	**48**	8.0	13.4	35	3.2	3.0	**10**	6	10	43	-30	90	48	22070.0530
M16	**58**	8.0	13.4	35	3.2	3.0	**10**	6	14	84	-30	90	54	22070.0532
M16	**58**	8.0	13.4	35	3.2	3.0	**15**	6	10	57	-30	90	55	22070.0536
M16	**58**	8.0	13.4	35	3.2	3.0	**20**	6	8	33	-30	90	56	22070.0540
M16	**83**	8.0	13.4	35	3.2	3.0	**20**	6	18	72	-30	90	71	22070.0542
M16	**98**	8.0	13.4	35	3.2	3.0	**25**	6	20	70	-30	90	82	22070.0544
M16	**98**	8.0	13.4	35	3.2	3.0	**30**	6	20	80	-30	90	84	22070.0550
M16	**148**	8.0	13.4	35	3.2	3.0	**40**	6	21	113	-30	90	121	22070.0555
M16	**148**	8.0	13.4	35	3.2	3.0	**50**	6	13	75	-30	90	121	22070.0560
M24	**60**	10.0	19.6	45	3.7	3.0	**15**	8	40	192	-30	90	135	22070.0580
stainless steel, heavy spring load, with thread lock														
M10	**35**	4.0	7.8	25	1.5	1.4	**8**	3	12	22	-30	90	13	22070.0308
M12	**43**	5.5	9.5	35	2.7	2.0	**10**	4	7	46	-30	90	23	22070.0312
M16	**48**	8.0	13.4	35	3.2	3.0	**10**	6	10	43	-30	90	47	22070.0330
M16	**58**	8.0	13.4	35	3.2	3.0	**15**	6	10	57	-30	90	55	22070.0336
M16	**58**	8.0	13.4	35	3.2	3.0	**20**	6	8	33	-30	90	55	22070.0340
M16	**98**	8.0	13.4	35	3.2	3.0	**25**	6	20	70	-30	90	82	22070.0344
M16	**98**	8.0	13.4	35	3.2	3.0	**30**	6	20	80	-30	90	83	22070.0350
M16	**148**	8.0	13.4	35	3.2	3.0	**40**	6	21	113	-30	90	122	22070.0355
M16	**148**	8.0	13.4	35	3.2	3.0	**50**	6	13	75	-30	90	122	22070.0360
M24	**60**	10.0	19.6	45	3.7	3.0	**15**	8	40	192	-30	90	135	22070.0380
body from heat treated steel, standard spring load, without locking														
M16	**80**	7.3	13.4	35	3.2	3.0	**11**	8	17	74	–	250	69	22070.0610
M16	**120**	7.3	13.4	35	3.2	3.0	**21**	8	21	81	–	250	96	22070.0612
M16	**150**	7.3	13.4	35	3.2	3.0	**31**	8	21	89	–	250	119	22070.0614
M16	**200**	7.3	13.4	35	3.2	3.0	**41**	8	16	80	–	250	149	22070.0616
M22	**130**	9.0	19.0	50	3.5	4.0	**21**	8	80	214	–	250	211	22070.0630
M22	**168**	9.0	19.0	50	3.5	4.0	**31**	8	70	210	–	250	278	22070.0632
M22	**226**	9.0	19.0	50	3.5	4.0	**41**	8	76	208	–	250	358	22070.0634

[1] statistical average value

chanhvinh.com

Accessories

	Dimensions					Art. No.
	d_1	b	d	l	[g]	
	[mm]					
Assembly Tool for mounting via slot (pin sided)						
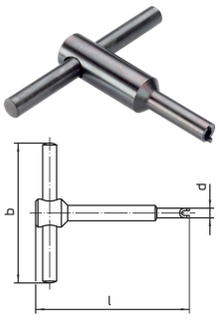	**M10**	80	7.8	70	87	22070.0830
	M12	80	9.5	75	88	22070.0832
	M16	80	13.4	95	110	22070.0834
	M22	100	19.0	100	245	22070.0836
	M24	100	19.9	100	258	22070.0838

Application example

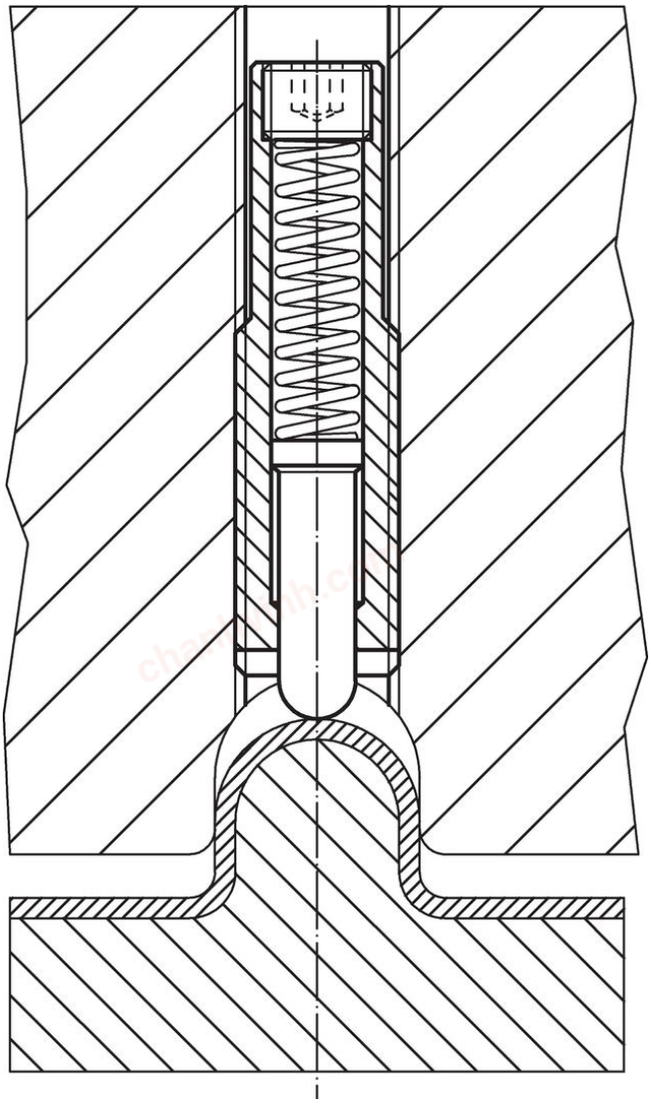

Compliance

For detailed compliance information please select the desired article number.