chanhvinh.com

Spring Plungers • smooth version
EH 22070.



Product Description

Especially designed for the use in tool-making.
Usable as ejection pins and spring stops.
Neither the spring plunger nor any individual parts can become detached from the housing.

Material

Pin
- Steel, case-hardened, blackened
- Stainless Steel 1.4305, nitrided

Body
- Free cutting steel, blackened
- Stainless steel 1.4305

Spring
- Stainless steel

More information

Notes

Customized design on request.
Spring plungers are specially tested for spring range and spring load.

Drawing

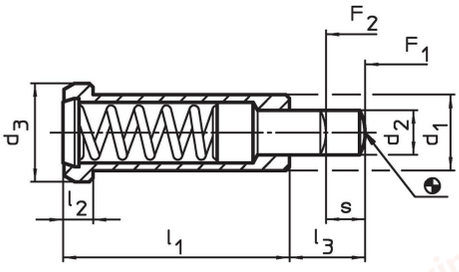

Order information

Dimensions						Stroke	Spring load[1]			Location hole		Art. No.
d_1 -0.05	d_2	d_3	l_1	l_2	l_3	s	F_1 ~	F_2 ~	max.	H7		
[mm]						[mm]	[N]		[°C]	[mm]	[g]	
free cutting steel, standard spring load												
6	2.7	8	20	3.2	6	3.5	10	22	250	6	4.0	22070.0006
8	3.9	10	24	3.2	8	4.5	30	88	250	8	7.5	22070.0008
10	5.9	13	30	4.0	10	5.5	42	110	250	10	15.0	22070.0010
12	7.9	16	36	5.0	12	6.5	50	130	250	12	28.0	22070.0012
stainless steel, standard spring load												
6	2.7	8	20	3.2	6	3.5	10	22	250	6	4.0	22070.0106
8	3.9	10	24	3.2	8	4.5	30	88	250	8	7.5	22070.0108
10	5.9	13	30	4.0	10	5.5	42	110	250	10	15.0	22070.0110
12	7.9	16	36	5.0	12	6.5	50	130	250	12	27.0	22070.0112

[1] statistical average value

chanhvinh.com

Application example

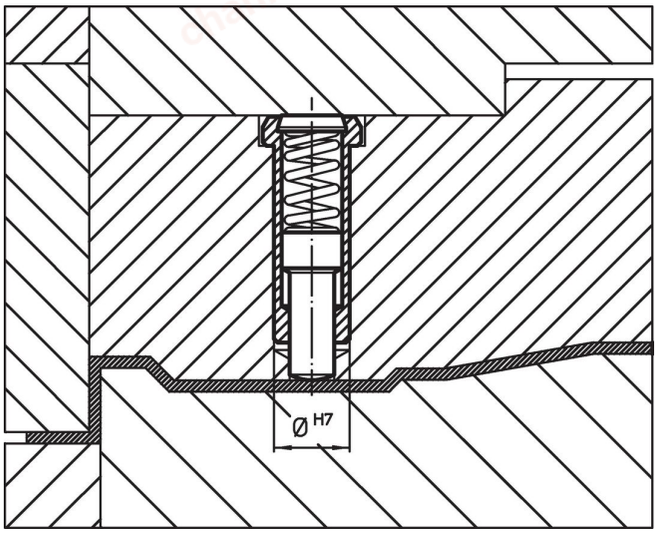

Compliance

For detailed compliance information please select the desired article number.