chanhvinh.com

Spring Plungers • with internal hexagon and seal
EH 22060.

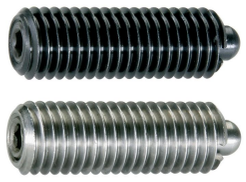

Product Description

Spring plungers can be used for locking as well as for applying or ejecting pressure.
By means of the seal, liquid cannot penetrate into the spring plunger.

Material

Pin
- Free cutting steel, hardened, blackened
- Stainless steel 1.4305

Seal
- NBR

Body
- Free cutting steel, blackened
- Stainless steel 1.4305

Spring
- Stainless steel

Assembly

Mounting and dismantling possible using an internal hexagon or slot.
Please use a special assembly tool for mounting with a slot (pin side).

More information

Notes

Customized design on request.
Spring plungers are specially tested for spring range and spring load.

References

Compared to EH 22060., i.e. "no seal", there are deviations in dimension l, spring load and temperature range.
Thread lock on request.

Further products

- Spring Plungers, with internal hexagon
- Holders, for spring plungers

Drawing

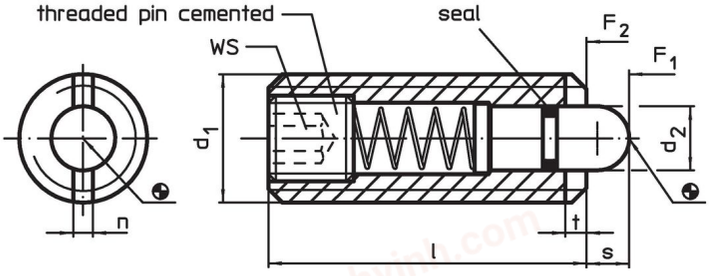

Order information

Dimensions					WS	Stroke	Spring load[1]					Art. No.
d_1	d_2	l	n	t		s	F_1 ~	F_2 ~	min.	max.		
[mm]					[mm]	[mm]	[N]		[°C]		[g]	
free cutting steel, standard spring load												
M 8	3.8	26	1.5	1.4	2.5	3.0	9	24	-30	80	6.6	22060.0048
M10	4.0	28	1.5	1.4	3.0	3.5	15	30	-30	80	12.0	22060.0050
M12	6.0	35	2.7	2.0	4.0	4.0	24	50	-30	80	20.0	22060.0052
M16	7.5	40	3.2	2.5	5.0	5.0	36	58	-30	80	43.0	22060.0056
free cutting steel, heavy spring load												
M 8	3.8	26	1.5	1.4	2.5	3.0	17	39	-30	80	6.7	22060.0148
M10	4.0	28	1.5	1.4	3.0	3.5	22	43	-30	80	12.0	22060.0150
M12	6.0	35	2.7	2.0	4.0	4.0	40	80	-30	80	20.0	22060.0152
M16	7.5	40	3.2	2.5	5.0	5.0	44	113	-30	80	44.0	22060.0156
stainless steel, standard spring load												
M 8	3.8	26	1.5	1.4	2.5	3.0	9	24	-30	80	6.8	22060.0448
M10	4.0	28	1.5	1.4	3.0	3.5	15	30	-30	80	12.0	22060.0450
M12	6.0	35	2.7	2.0	4.0	4.0	24	50	-30	80	20.0	22060.0452
M16	7.5	40	3.2	2.5	5.0	5.0	36	58	-30	80	44.0	22060.0456

[1] statistical average value

chanhvinh.com

Accessories

	Dimensions					Art. No.
	d_1	b	d	l	[g]	
Assembly Tool for mounting via slot (pin sided)						
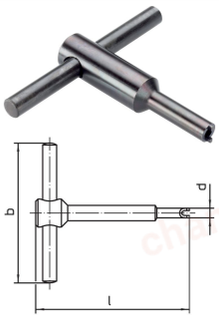	**M 8**	60	6.45	70	39	22060.0908
	M10	80	8.00	80	66	22060.0910
	M12	80	9.80	80	72	22060.0912
	M16	100	13.50	105	144	22060.0916

Application example

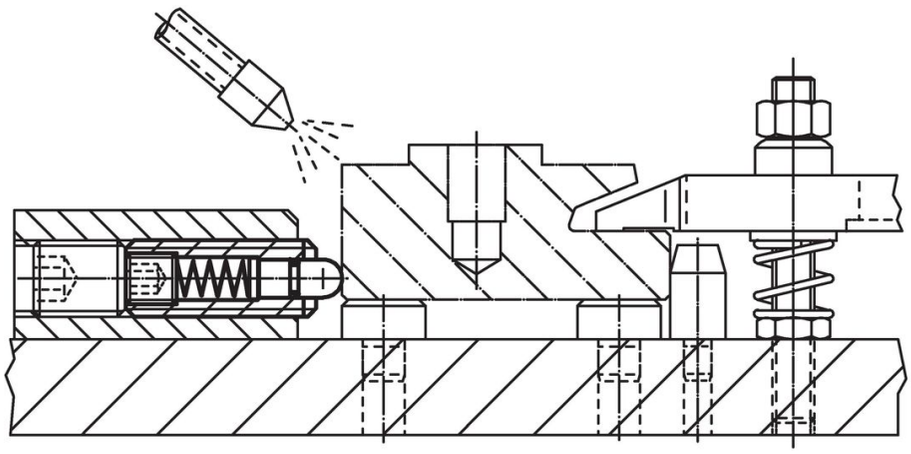

Compliance

For detailed compliance information please select the desired article number.