chanhvinh.com

Spring Plungers • with internal hexagon
EH 22060.



Product Description

Spring plungers can be used for locking as well as for applying or ejecting pressure.

Material

Pin
- Free cutting steel, hardened, blackened
- Thermoplastic POM, white
- Stainless Steel 1.4305, nitrided

Body
- Free cutting steel, blackened
- Stainless steel 1.4305

Spring
- Stainless steel

Assembly

Mounting and dismantling possible using an internal hexagon or slot.
Please use a special assembly tool for mounting with a slot (pin side).

More information

Notes

Customized design on request.
Spring plungers are specially tested for spring range and spring load.

References

Thread lock on request.

Further products

- Spring Plungers, with internal hexagon and seal
- Holders, for spring plungers

Drawing

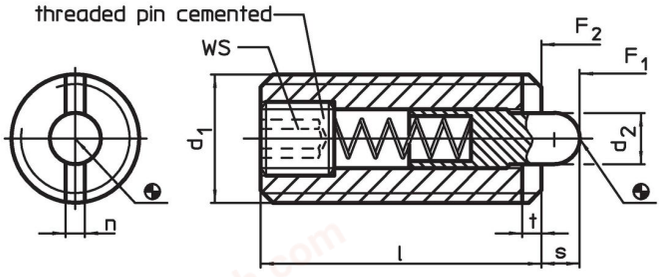

Order information

Dimensions d_1	d_2	l	n	t	WS	Stroke s	Spring load[1] F_1 ~	F_2 ~	min.	max.		Art. No.
[mm]					[mm]	[mm]	[N]		[°C]		[g]	
free cutting steel, standard spring load												
M 3	1.0	12	0.4	0.5	0.7	1.0	2.5	3	–	250	0.4	22060.0003
M 4	1.5	15	0.6	0.6	1.3	1.5	4.0	16	–	250	0.9	22060.0004
M 5	2.4	18	1.2	0.8	1.5	2.3	6.0	20	–	250	1.7	22060.0005
M 6	2.7	20	1.3	0.9	2.0	2.5	7.0	22	–	250	2.8	22060.0006
M 8	3.5	22	1.5	1.4	2.5	3.0	8.0	38	–	250	5.7	22060.0008
M10	4.0	22	1.5	1.4	3.0	3.0	10.0	38	–	250	9.2	22060.0010
M12	6.0	28	2.7	2.0	4.0	4.0	10.0	54	–	250	16.0	22060.0012
M16	7.5	32	3.2	2.5	5.0	5.0	38.0	100	–	250	35.0	22060.0016
M20	10.0	40	3.7	3.0	6.0	7.0	58.0	140	–	250	68.0	22060.0020
M24	12.0	52	3.7	3.0	8.0	10.0	80.0	180	–	250	130.0	22060.0024
free cutting steel, heavy spring load												
M 5	2.4	18	1.2	0.8	1.5	2.3	15.0	44	–	250	5.7	22060.0105
M 6	2.7	20	1.3	0.9	2.0	2.5	20.0	48	–	250	2.7	22060.0106
M 8	3.5	22	1.5	1.4	2.5	3.0	26.0	70	–	250	5.7	22060.0108
M10	4.0	22	1.5	1.4	3.0	3.0	26.0	70	–	250	9.1	22060.0110

[1] statistical average value

chanhvinh.com

Dimensions					WS	Stroke	Spring load[1]					Art. No.
d_1	d_2	l	n	t		s	F_1 ~	F_2 ~	min.	max.		
[mm]					[mm]	[mm]	[N]		[°C]		[g]	
M12	6.0	28	2.7	2.0	4.0	4.0	51.0	122	–	250	15.0	22060.0112
M16	7.5	32	3.2	2.5	5.0	5.0	72.0	164	–	250	26.0	22060.0116
M20	10.0	40	3.7	3.0	6.0	7.0	88.0	206	–	250	68.0	22060.0120
M24	12.0	52	3.7	3.0	8.0	10.0	94.0	250	–	250	130.0	22060.0124
free cutting steel, pin from thermoplastic, standard spring load												
M 4	1.5	15	0.6	0.6	1.3	1.5	4.0	16	-30	50	0.9	22060.0204
M 5	2.4	18	1.2	0.8	1.5	2.3	6.0	20	-30	50	1.5	22060.0205
M 6	2.7	20	1.3	0.9	2.0	2.5	7.0	22	-30	50	2.3	22060.0206
M 8	3.5	22	1.5	1.4	2.5	3.0	8.0	38	-30	50	5.0	22060.0208
M10	4.0	22	1.5	1.4	3.0	3.0	10.0	38	-30	50	8.1	22060.0210
M12	6.0	28	2.7	2.0	4.0	4.0	10.0	54	-30	50	14.0	22060.0212
M16	7.5	32	3.2	2.5	5.0	5.0	38.0	100	-30	50	31.0	22060.0216
M20	10.0	40	3.7	3.0	6.0	7.0	58.0	140	-30	50	56.0	22060.0220
M24	12.0	52	3.7	3.0	8.0	10.0	80.0	180	-30	50	109.0	22060.0224
stainless steel, standard spring load												
M 3	1.0	12	0.4	0.5	0.7	1.0	2.5	3	–	250	0.9	22060.0403
M 4	1.5	15	0.6	0.6	1.3	1.5	4.0	16	–	250	0.9	22060.0404
M 5	2.4	18	1.2	0.8	1.5	2.3	6.0	20	–	250	1.7	22060.0405
M 6	2.7	20	1.3	0.9	2.0	2.5	6.0	22	–	250	2.8	22060.0406
M 8	3.5	22	1.5	1.4	2.5	3.0	8.0	38	–	250	5.7	22060.0408
M10	4.0	22	1.5	1.4	3.0	3.0	10.0	38	–	250	9.5	22060.0410
M12	6.0	28	2.7	2.0	4.0	4.0	10.0	54	–	250	16.0	22060.0412
M16	7.5	32	3.2	2.5	5.0	5.0	38.0	100	–	250	34.0	22060.0416
M20	10.0	40	3.7	3.0	6.0	7.0	58.0	140	–	250	67.0	22060.0420
M24	12.0	52	3.7	3.0	8.0	10.0	80.0	180	–	250	130.0	22060.0424
stainless steel, heavy spring load												
M 5	2.4	18	1.2	0.8	1.5	2.3	15.0	44	–	250	1.6	22060.0505
M 6	2.7	20	1.3	0.9	2.0	2.5	20.0	48	–	250	2.8	22060.0506
M 8	3.5	22	1.5	1.4	2.5	3.0	26.0	70	–	250	5.7	22060.0508
M10	4.0	22	1.5	1.4	3.0	3.0	26.0	70	–	250	9.1	22060.0510
M12	6.0	28	2.7	2.0	4.0	4.0	51.0	122	–	250	16.0	22060.0512
M16	7.5	32	3.2	2.5	5.0	5.0	72.0	164	–	250	35.0	22060.0516
M20	10.0	40	3.7	3.0	6.0	7.0	88.0	206	–	250	68.0	22060.0520
M24	12.0	52	3.7	3.0	8.0	10.0	94.0	250	–	250	131.0	22060.0524
stainless steel, pin from thermoplastic, standard spring load												
M 4	1.5	15	0.6	0.6	1.3	1.5	4.0	16	-30	50	0.9	22060.0604
M 5	2.4	18	1.2	0.8	1.5	2.3	6.0	20	-30	50	1.6	22060.0605
M 6	2.7	20	1.3	0.9	2.0	2.5	7.0	22	-30	50	2.5	22060.0606
M 8	3.5	22	1.5	1.4	2.5	3.0	8.0	38	-30	50	5.1	22060.0608
M10	4.0	22	1.5	1.4	3.0	3.0	10.0	38	-30	50	8.5	22060.0610
M12	6.0	28	2.7	2.0	4.0	4.0	10.0	54	-30	50	14.0	22060.0612
M16	7.5	32	3.2	2.5	5.0	5.0	38.0	100	-30	50	31.0	22060.0616
M20	10.0	40	3.7	3.0	6.0	7.0	58.0	140	-30	50	56.0	22060.0620
M24	12.0	52	3.7	3.0	8.0	10.0	80.0	180	-30	50	110.0	22060.0624
stainless steel, pin from thermoplastic, heavy spring load												
M 5	2.4	18	1.2	0.8	1.5	2.3	15.0	44	-30	50	1.6	22060.0705
M 6	2.7	20	1.3	0.9	2.0	2.5	20.0	48	-30	50	2.6	22060.0706
M 8	3.5	22	1.5	1.4	2.5	3.0	26.0	70	-30	50	5.4	22060.0708
M10	4.0	22	1.5	1.4	3.0	3.0	26.0	70	-30	50	8.4	22060.0710
M12	6.0	28	2.7	2.0	4.0	4.0	51.0	122	-30	50	14.0	22060.0712
M16	7.5	32	3.2	2.5	5.0	5.0	72.0	164	-30	50	32.0	22060.0716
M20	10.0	40	3.7	3.0	6.0	7.0	88.0	206	-30	50	57.0	22060.0720
M24	12.0	52	3.7	3.0	8.0	10.0	94.0	250	-30	50	109.0	22060.0724

[1] statistical average value

chanhvinh.com

Accessories

	Dimensions					Art. No.
	d_1	b	d	l		
	[mm]				[g]	
Assembly Tool for mounting via slot (pin sided)						
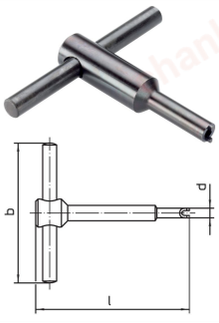	**M 3**	50	2.35	55	17	22060.0903
	M 4	50	3.00	55	18	22060.0904
	M 5	50	4.00	60	21	22060.0905
	M 6	60	4.70	60	30	22060.0906
	M 8	60	6.45	70	39	22060.0908
	M10	80	8.00	80	66	22060.0910
	M12	80	9.80	80	72	22060.0912
	M16	100	13.50	105	144	22060.0916
	M20	100	17.00	115	162	22060.0920
	M24	100	19.90	100	258	22070.0838

Application example

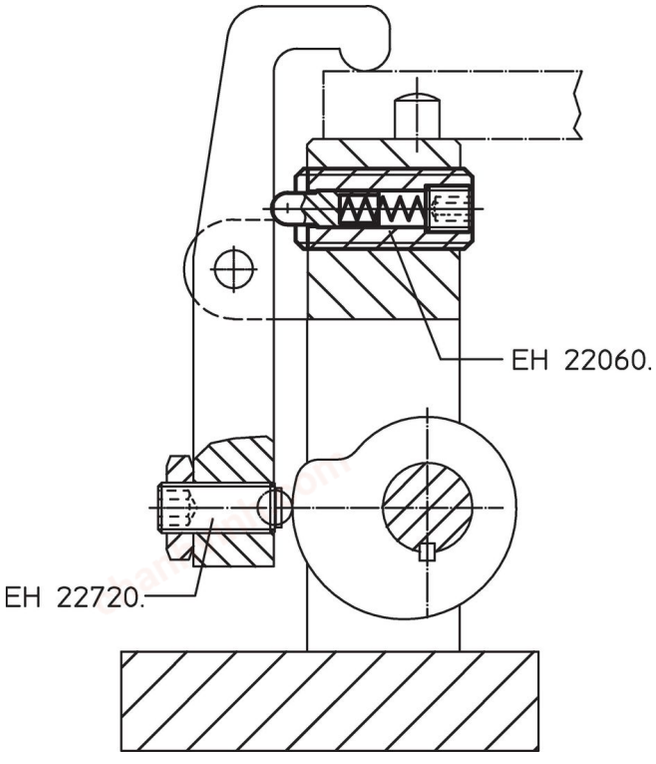

Compliance

For detailed compliance information please select the desired article number.