chanhvinh.com

Spring Plungers • with moveable ceramic ball and slot, stainless steel A4
EH 22051.



Product Description

Spring plungers can be used for locking as well as for applying or ejecting pressure.
The bearing of the ball allows it to unroll, which minimises wear on the counterpart. This also results in a positive locking behaviour depending on the counterpart.
Another advantage of the moveable ceramic ball is the electric insulation.
Characteristics of the ceramic ball:
- Highly impact-resistant
- Abrasion resistant
- Antimagnetic
- Electrically isolating

The stainless steel A4 version ensures maximum corrosion resistance.

Material

Body
- Stainless steel A4

Bearing
- plastic

Ball
- Ceramic

Spring
- Stainless steel

More information

Notes

Customized design on request.
Spring plungers are specially tested for spring range and spring load.

References

Thread lock on request.
Calculation of indexing resistance, please refer to application example

Further products

- Spring Plungers, with ceramic ball and slot, stainless steel A4
- Locators, bolt-on, for spring plungers
- Locators, smooth, for spring plungers
- Holders, for spring plungers

Drawing

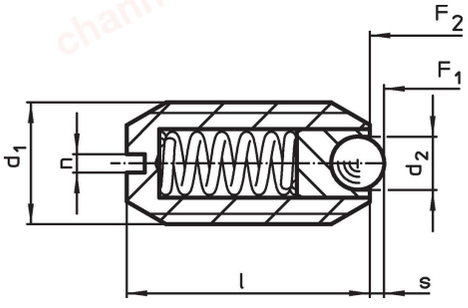

Order information

Dimensions				Stroke	Spring load[1]					Art. No.
d_1	d_2 ~	l ~	n	s	F_1 ~	F_2 ~	min.	max.		
[mm]				[mm]	[N]		[°C]		[g]	
Standard spring load										
M 5	2.0	12	0.8	0.50	4.8	6.8	-30	90	0.9	22051.0505
M 6	2.5	14	1.0	0.70	6.3	10.0	-30	90	1.5	22051.0506
M 8	3.5	16	1.2	0.95	16.1	24.0	-30	90	3.2	22051.0508
M10	4.5	19	1.5	1.40	18.8	31.7	-30	90	5.8	22051.0510
M12	6.5	22	2.0	2.50	24.0	49.0	-30	90	8.9	22051.0512
M16	8.5	24	2.0	3.10	38.0	68.0	-30	90	19.0	22051.0516

[1] statistical average value

chanhvinh.com

Dimensions				Stroke	Spring load[1]					Art. No.
d_1	d_2 ~	l ~	n	s	F_1 ~	F_2 ~	min.	max.		
[mm]				[mm]	[N]		[°C]		[g]	
heavy spring load										
M 5	2.0	12	0.8	0.50	10.0	14.0	-30	90	0.9	22051.0705
M 6	2.5	14	1.0	0.70	11.0	16.0	-30	90	1.5	22051.0706
M 8	3.5	16	1.2	0.95	22.9	40.0	-30	90	3.3	22051.0708
M10	4.5	19	1.5	1.40	28.1	54.3	-30	90	5.8	22051.0710
M12	6.5	22	2.0	2.50	36.5	77.3	-30	90	9.0	22051.0712
M16	8.5	24	2.0	3.10	50.0	88.7	-30	90	19.0	22051.0716

[1] statistical average value

Application example

CALCULATION OF THE INDEXING RESISTANCE

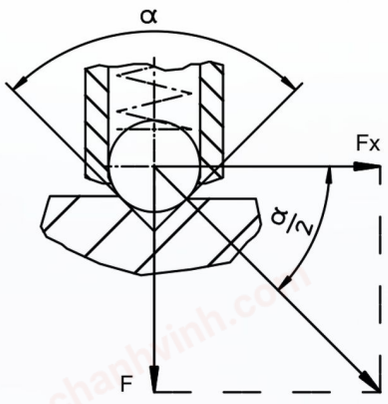

Sample calculation for:
α = 60°, Fx = 1,732 x F
α = 90°, Fx = F
α = 120°, Fx = 0,577 x F

$$Fx = \frac{F}{\tan \frac{\alpha}{2}}$$

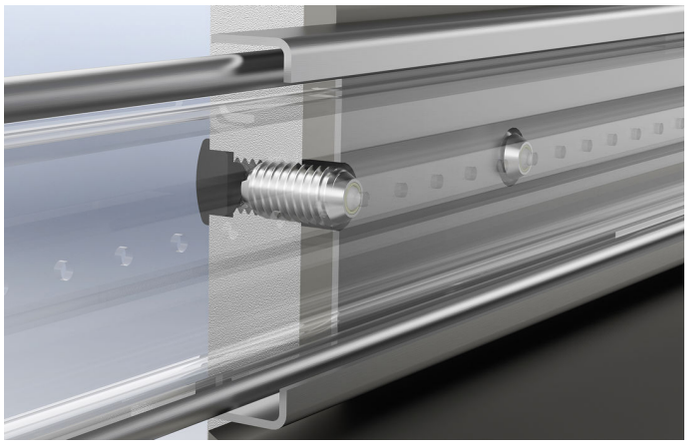

Compliance

RoHS-compliant
Compliant with Directive 2011/65/EU [RoHS].

Does not contain SVHC substances
No SVHC substances with more than 0.1% w/w contained - SVHC list [REACH] as of 04.02.2026.

SCIP-code
N/A

Does not contain Proposition 65 substances
No Proposition 65 substances included.
https://www.P65Warnings.ca.gov/

Free from Conflict Minerals
This product does not contain any substances designated as "conflict minerals" such as tantalum, tin, gold or tungsten from the Democratic Republic of Congo or adjacent countries.

POP-compliant
Contains no persistent organic pollutants – Stockholm Convention [POP] as of September 2025.

PFAS-compliant
Contains no per- and polyfluoroalkyl substances (PFAS).

TSCA-compliant
Agent concentration in this product does not exceed the specified threshold.