chanhvinh.com

Spring Plungers • with moveable ball and slot

EH 22051.



Product Description

Spring plungers can be used for locking as well as for applying or ejecting pressure.
The mounting of the ball allows it to roll, thereby minimising wear on the counterpart. Depending on the counterpart, this also has a positive effect on the resting behaviour.
Another advantage of the plastic ball is the electric insulation.

Material

Body
- Free cutting steel, blackened
- Stainless steel 1.4305

Bearing
- plastic

Ball
- Ball-bearing steel, hardened
- Stainless steel, hardened

Spring
- Stainless steel

More information

Notes

Customized design on request.
Spring plungers are specially tested for spring range and spring load.

References

Thread lock on request.
Calculation of indexing resistance, please refer to application example

Further products

- Locators, bolt-on, for spring plungers
- Locators, smooth, for spring plungers
- Holders, for spring plungers

Drawing

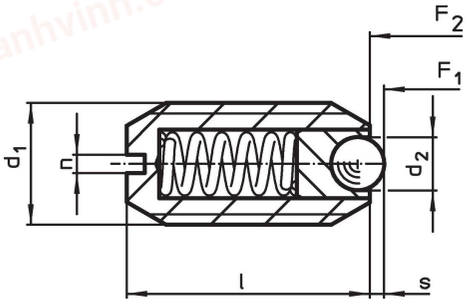

Order information

Dimensions				Stroke	Spring load[1]					Art. No.
d_1	d_2	l	n	s	F_1 ~	F_2 ~	min.	max.		
[mm]				[mm]	[N]		[°C]		[g]	
free cutting steel, standard spring load										
M 5	2.0	12	0.8	0.50	4.8	6.8	-30	90	0.9	22051.0005
M 6	2.5	14	1.0	0.70	6.3	10.0	-30	90	1.5	22051.0006
M 8	3.5	16	1.2	0.95	16.0	24.0	-30	90	3.3	22051.0008
M10	4.5	19	1.5	1.40	18.8	31.7	-30	90	6.0	22051.0010
M12	6.5	22	2.0	2.50	24.0	49.0	-30	90	9.4	22051.0012
M16	8.5	24	2.0	3.10	38.0	68.0	-30	90	20.0	22051.0016
free cutting steel, heavy spring load										
M 5	2.0	12	0.8	0.50	10.0	14.0	-30	90	0.9	22051.0205
M 6	2.5	14	1.0	0.70	11.0	16.0	-30	90	1.5	22051.0206
M 8	3.5	16	1.2	0.95	23.0	40.0	-30	90	3.3	22051.0208
M10	4.5	19	1.5	1.40	28.0	54.3	-30	90	6.0	22051.0210
M12	6.5	22	2.0	2.50	36.5	77.3	-30	90	9.4	22051.0212
M16	8.5	24	2.0	3.10	50.0	88.7	-30	90	20.0	22051.0216

[1] statistical average value

chanhvinh.com

Dimensions				Stroke	Spring load[1]					Art. No.
d_1	d_2	l	n	s	F_1 ~	F_2 ~	min.	max.		
[mm]				[mm]	[N]		[°C]		[g]	
stainless steel, standard spring load										
M 5	2.0	12	0.8	0.50	4.8	6.8	-30	90	0.9	22051.0405
M 6	2.5	14	1.0	0.70	6.3	10.0	-30	90	1.5	22051.0406
M 8	3.5	16	1.2	0.95	16.0	24.0	-30	90	3.3	22051.0408
M10	4.5	19	1.5	1.40	18.8	31.7	-30	90	6.0	22051.0410
M12	6.5	22	2.0	2.50	24.0	49.0	-30	90	9.3	22051.0412
M16	8.2	24	2.0	3.10	38.0	68.0	-30	90	20.0	22051.0416
stainless steel, heavy spring load										
M 5	2.0	12	0.8	0.50	10.0	14.0	-30	90	0.9	22051.0605
M 6	2.5	14	1.0	0.70	11.0	16.0	-30	90	1.6	22051.0606
M 8	3.5	16	1.2	0.95	23.0	40.0	-30	90	3.3	22051.0608
M10	4.5	19	1.5	1.40	28.0	54.3	-30	90	6.1	22051.0610
M12	6.5	22	2.0	2.50	36.5	77.3	-30	90	9.4	22051.0612
M16	8.5	24	2.0	3.10	50.0	88.7	-30	90	21.0	22051.0616

[1] statistical average value

Application example

CALCULATION OF THE INDEXING RESISTANCE

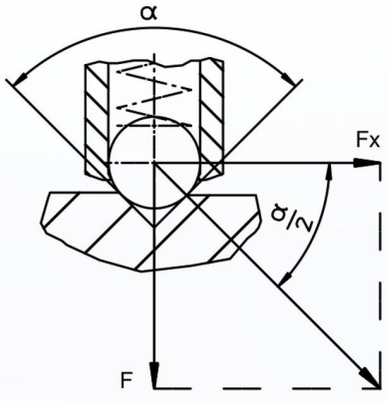

Sample calculation for:
α = 60°, Fx = 1,732 x F
α = 90°, Fx = F
α = 120°, Fx = 0,577 x F

$$Fx = \frac{F}{\tan \frac{\alpha}{2}}$$

chanhvinh.com

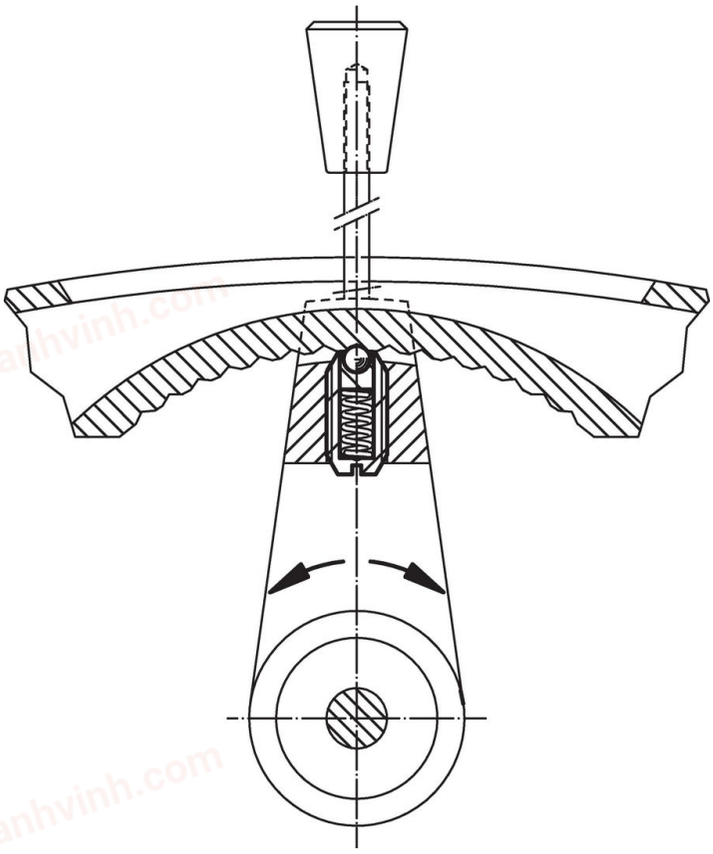

Compliance

For detailed compliance information please select the desired article number.