chanhvinh.com

Spring Plungers • with pin and slot

EH 22050.



Product Description

Spring plungers can be used for locking as well as for applying or ejecting pressure.

Material

Pin
- Free cutting steel, hardened, blackened
- Stainless Steel 1.4305, nitrided

Body
- Free cutting steel, blackened
- Stainless steel 1.4305

Spring
- Stainless steel

More information

Notes

Customized design on request.
Spring plungers are specially tested for spring range and spring load.

References

Thread lock on request.

Further products

- Holders, for spring plungers
- Spring Plungers, with pin and slot - INCH

Drawing

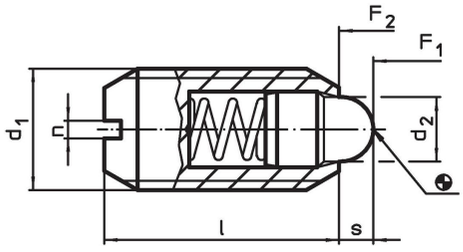

Order information

Dimensions				Stroke	Spring load[1]				Art. No.
d_1	d_2	l	n	s	F_1 ~	F_2 ~	max.		
[mm]				[mm]	[N]		[°C]	[g]	
free cutting steel, standard spring load									
M 4	1.8	9	0.6	1.5	4.5	12.5	250	0.5	22050.0104
M 5	2.4	12	0.8	2.0	5.0	13.0	250	1.1	22050.0105
M 6	2.7	14	1.0	2.0	6.0	17.0	250	1.8	22050.0106
M 8	3.8	16	1.2	2.0	16.0	33.0	250	3.7	22050.0108
M10	4.5	19	1.5	2.5	19.0	42.0	250	6.9	22050.0110
M12	6.2	22	2.0	3.5	22.0	57.0	250	11.0	22050.0112
M16	8.5	24	2.0	4.5	38.0	78.0	250	22.0	22050.0116
M20	10.0	30	2.5	6.5	39.0	81.0	250	45.0	22050.0120
M24	13.0	34	3.0	8.0	72.0	155.0	250	73.0	22050.0124
free cutting steel, heavy spring load									
M 4	1.8	9	0.6	1.5	6.4	18.0	250	0.5	22050.0304
M 5	2.4	12	0.8	2.0	8.0	17.0	250	1.1	22050.0305
M 6	2.7	14	1.0	2.0	11.0	25.0	250	1.8	22050.0306
M 8	3.8	16	1.2	2.0	23.0	59.0	250	3.8	22050.0308
M10	4.5	19	1.5	2.5	20.0	54.0	250	6.9	22050.0310
M12	6.2	22	2.0	3.5	38.0	96.0	250	11.0	22050.0312
M16	8.5	24	2.0	4.5	50.0	100.0	250	22.0	22050.0316
M20	10.0	30	2.5	6.5	52.0	133.0	250	46.0	22050.0320
M24	13.0	34	3.0	8.0	91.0	223.0	250	73.0	22050.0324
stainless steel, standard spring load									
M 4	1.8	9	0.6	1.5	4.5	12.5	250	0.5	22050.0504
M 5	2.4	12	0.8	2.0	5.0	13.0	250	1.1	22050.0505
M 6	2.7	14	1.0	2.0	6.0	17.0	250	1.8	22050.0506
M 8	3.8	16	1.2	2.0	16.0	33.0	250	3.8	22050.0508

[1] statistical average value

chanhvinh.com

Dimensions				Stroke	Spring load[1]				Art. No.
d_1	d_2	l	n	s	F_1 ~	F_2 ~	max.		
[mm]				[mm]	[N]		[°C]	[g]	
M10	4.5	19	1.5	2.5	19.0	42.0	250	7.0	22050.0510
M12	6.2	22	2.0	3.5	22.0	57.0	250	11.0	22050.0512
M16	8.5	24	2.0	4.5	38.0	78.0	250	23.0	22050.0516
M20	10.0	30	2.5	6.5	39.0	81.0	250	46.0	22050.0520
M24	13.0	34	3.0	8.0	72.0	155.0	250	73.0	22050.0524
stainless steel, heavy spring load									
M 4	1.8	9	0.6	1.5	6.4	18.0	250	0.5	22050.0704
M 5	2.4	12	0.8	2.0	8.0	17.0	250	1.1	22050.0705
M 6	2.7	14	1.0	2.0	11.0	25.0	250	1.8	22050.0706
M 8	3.8	16	1.2	2.0	23.0	59.0	250	3.8	22050.0708
M10	4.5	19	1.5	2.5	20.0	54.0	250	7.0	22050.0710
M12	6.2	22	2.0	3.5	38.0	96.0	250	11.0	22050.0712
M16	8.5	24	2.0	4.5	50.0	100.0	250	23.0	22050.0716
M20	10.0	30	2.5	6.5	52.0	133.0	250	46.0	22050.0720
M24	13.0	34	3.0	8.0	91.0	223.0	250	73.0	22050.0724

[1] statistical average value

Application example

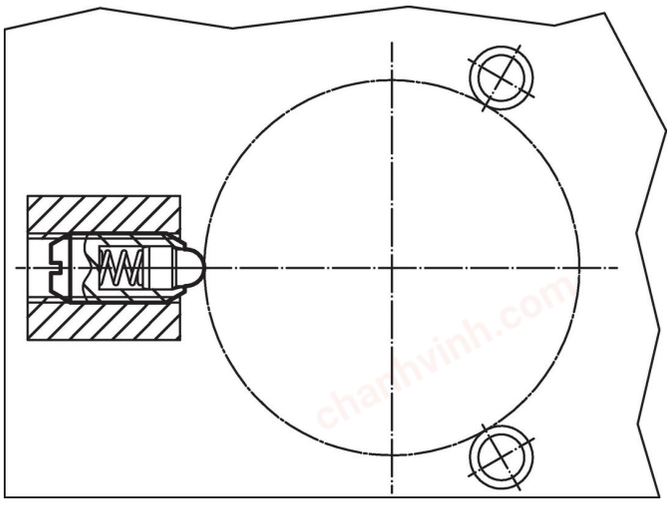

Compliance

For detailed compliance information please select the desired article number.