chanhvinh.com

Spring Plungers • with ceramic ball and slot, stainless steel A4

EH 22050.



Product Description

Spring plungers can be used for locking as well as for applying or ejecting pressure.
The version from stainless steel A4 guarantees the highest corrosion protection.
Characteristics of the ceramic ball:

- Highly impact-resistant
- Abrasion resistant
- Antimagnetic
- Electrically isolating

Material

Body
- Stainless steel A4, passivated

Ball
- Ceramic

Spring
- Stainless steel A4, passivated

More information

Notes

Customized design on request.
Spring plungers are specially tested for spring range and spring load.

References

Thread lock on request.
Calculation of indexing resistance, please refer to application example

Further products

- Spring Plungers, with moveable ceramic ball and slot, stainless steel A4
- Locators, bolt-on, for spring plungers
- Locators, smooth, for spring plungers
- Holders, for spring plungers

Drawing

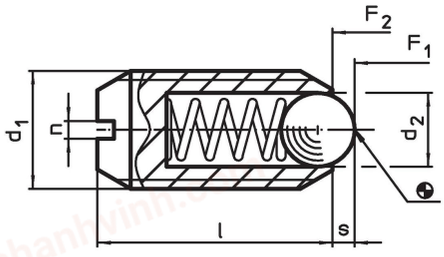

Order information

Dimensions				Stroke	Spring load[1]				Art. No.
d_1	d_2	l	n	s	F_1 ~	F_2 ~	max.		
[mm]				[mm]	[N]		[°C]	[g]	
stainless steel A4, standard spring load									
M 3	1.5	7	0.4	0.4	3.0	4.6	250	0.2	22050.1403
M 4	2.5	9	0.6	0.8	8.5	14.0	250	0.4	22050.1404
M 5	3.0	12	0.8	0.9	8.0	14.0	250	0.9	22050.1405
M 6	3.5	14	1.0	1.0	11.0	18.0	250	1.6	22050.1406
M 8	4.5	16	1.2	1.5	18.0	31.0	250	3.4	22050.1408
M10	6.0	19	1.5	2.0	24.0	45.0	250	6.2	22050.1410
M12	8.0	22	2.0	2.5	26.0	49.0	250	9.5	22050.1412
M16	10.0	24	2.0	3.5	41.0	86.0	250	21.0	22050.1416
stainless steel A4, heavy spring load									
M 4	2.5	9	0.6	0.8	12.0	18.0	250	0.4	22050.1604
M 5	3.0	12	0.8	0.9	15.0	22.0	250	0.9	22050.1605
M 6	3.5	14	1.0	1.0	19.0	28.0	250	1.6	22050.1606

[1] statistical average value

chanhvinh.com

Dimensions				Stroke	Spring load[1]				Art. No.
d_1	d_2	l	n	s	F_1 ~	F_2 ~	max.		
[mm]				[mm]	[N]		[°C]	[g]	
M 8	4.5	16	1.2	1.5	36.0	62.0	250	3.4	22050.1608
M10	6.0	19	1.5	2.0	57.0	104.0	250	6.2	22050.1610
M12	8.0	22	2.0	2.5	61.0	110.0	250	9.7	22050.1612
M16	10.0	24	2.0	3.5	68.0	142.0	250	21.0	22050.1616

[1] statistical average value

Application example

CALCULATION OF THE INDEXING RESISTANCE

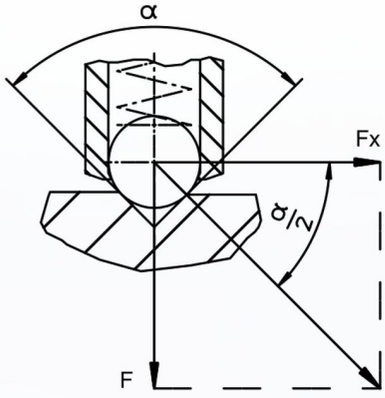

Sample calculation for:
α = 60°, Fx = 1,732 x F
α = 90°, Fx = F
α = 120°, Fx = 0,577 x F

$$Fx = \frac{F}{\tan \frac{\alpha}{2}}$$



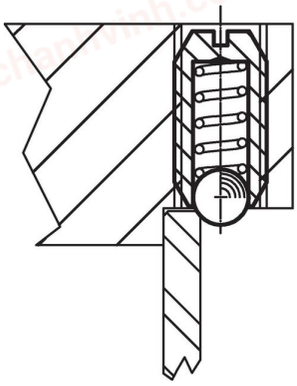

chanhvinh.com

Compliance

RoHS-compliant
Compliant with Directive 2011/65/EU [RoHS].

Does not contain SVHC substances
No SVHC substances with more than 0.1% w/w contained - SVHC list [REACH] as of 04.02.2026.

SCIP-code
N/A

Does not contain Proposition 65 substances
No Proposition 65 substances included.
https://www.P65Warnings.ca.gov/

Free from Conflict Minerals
This product does not contain any substances designated as "conflict minerals" such as tantalum, tin, gold or tungsten from the Democratic Republic of Congo or adjacent countries.

POP-compliant
Contains no persistent organic pollutants – Stockholm Convention [POP] as of September 2025.

PFAS-compliant
Contains no per- and polyfluoroalkyl substances (PFAS).

TSCA-compliant
Agent concentration in this product does not exceed the specified threshold.