chanhvinh.com

Holders • for spring plungers
EH 22045.



Product Description

Holders are used to mount spring plungers on the side. Ball-ended thrust screws, thrust screws, grub screws or similar can also be screwed into the thread.
The mounting thread is positioned 90° to the mounting direction in the holder. The slotted holes allow precise positioning of the holder during installation.

Material

- Stainless steel 1.4308, precision casting, matt blasted

Assembly

Slotted holes are provided for mounting the holder. This allows it to be positioned precisely in the longitudinal direction. The mounting thread, e.g. for a spring plungers, is continuous. This means that a lock nut can be used to secure it after adjustment.

Drawing

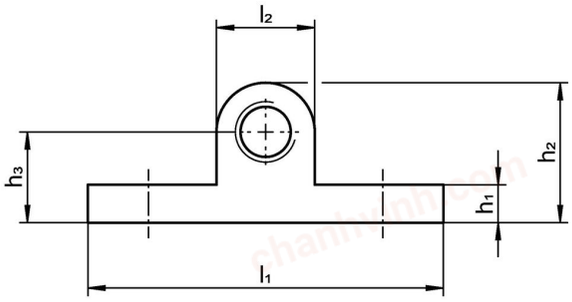

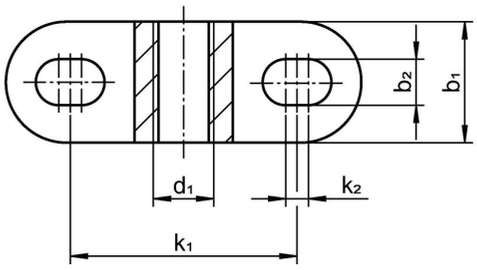

Order information

	Dimensions									For screws		Art. No.
d_1	b_1	b_2	h_1	h_2	h_3	k_1	k_2	l_1	l_2	[mm]	[g]	
				[mm]								
two-sided												
M 4	8	3	2.5	9.5	6	16	1.5	25	7	M3	4.5	22045.0004
M 5	10	4	3.5	12.0	8	20	2.0	32	8	M4	8.8	22045.0005
M 6	12	5	4.0	15.0	10	24	2.5	38	10	M5	15.0	22045.0006
M 8	16	6	5.0	18.5	12	30	3.0	47	13	M6	30.0	22045.0008
M10	20	8	6.0	23.0	15	38	4.0	60	16	M8	57.0	22045.0010

chanhvinh.com

Compliance

RoHS-compliant
Compliant with Directive 2011/65/EU [RoHS].

Does not contain SVHC substances
No SVHC substances with more than 0.1% w/w contained - SVHC list [REACH] as of 04.02.2026.

SCIP-code
N/A

Does not contain Proposition 65 substances
No Proposition 65 substances included.
https://www.P65Warnings.ca.gov/

Free from Conflict Minerals
This product does not contain any substances designated as "conflict minerals" such as tantalum, tin, gold or tungsten from the Democratic Republic of Congo or adjacent countries.

POP-compliant
Contains no persistent organic pollutants – Stockholm Convention [POP] as of September 2025.

PFAS-compliant
Contains no per- and polyfluoroalkyl substances (PFAS).

TSCA-compliant
Agent concentration in this product does not exceed the specified threshold.