chanhvinh.com

Spring Plungers • with ball and internal hexagon

EH 22030.



Product Description

Spring plungers with ball and internal hexagon can be used for locking, positioning, fixing as well as as a detent or for ejection.
This spring plunger is a screw-in component with a ball and a compression spring. Each version is available with standard spring load and heavy spring load.
This spring plunger made of steel / stainless steel with ball is mounted using an internal hexagon.
An article group with pins is also available in the product range.

Material

Body
- Free cutting steel, blackened
- Stainless steel 1.4305

Ball
- Ball-bearing steel, hardened
- Stainless steel, hardened

Spring
- Stainless steel

More information

Notes

Customized design on request.
Spring plungers are specially tested for spring range and spring load.

References

Thread lock on request.
Calculation of indexing resistance, please refer to application example

Further products

- Locators, bolt-on, for spring plungers
- Locators, smooth, for spring plungers
- Holders, for spring plungers

Drawing

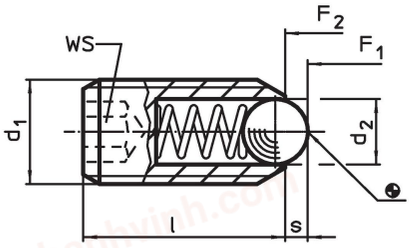

Order information

Dimensions			WS	Stroke	Spring load[1]				Art. No.
d_1	d_2	l		s	F_1 ~	F_2 ~	max.		
[mm]			[mm]	[mm]	[N]		[°C]	[g]	
free cutting steel, standard spring load									
M 3	1.5	8	1.5	0.4	3.0	4.5	250	0.2	22030.0003
M 4	2.5	12	2.0	0.8	8.5	14.0	250	0.6	22030.0004
M 5	3.0	14	2.5	0.9	8.0	14.0	250	1.2	22030.0005
M 6	3.5	15	3.0	1.0	11.0	18.0	250	1.7	22030.0006
M 8	4.5	18	4.0	1.5	18.0	31.0	250	3.9	22030.0008
M10	6.0	23	5.0	2.0	24.0	45.0	250	8.0	22030.0010
M12	8.0	26	6.0	2.5	26.0	49.0	250	12.0	22030.0012
M16	10.0	33	8.0	3.5	41.0	86.0	250	32.0	22030.0016
M20	12.0	43	10.0	4.5	56.0	111.0	250	67.0	22030.0020
M24	15.0	48	12.0	5.5	81.0	151.0	250	105.0	22030.0024
free cutting steel, heavy spring load									
M 3	1.5	8	1.5	0.4	5.0	9.0	250	0.2	22030.0043
M 4	2.5	12	2.0	0.8	12.0	18.0	250	0.6	22030.0044
M 5	3.0	14	2.5	0.9	15.0	22.0	250	1.2	22030.0045
M 6	3.5	15	3.0	1.0	19.0	28.0	250	1.7	22030.0046
M 8	4.5	18	4.0	1.5	36.0	62.0	250	4.0	22030.0048
M10	6.0	23	5.0	2.0	57.0	104.0	250	8.1	22030.0050

[1] statistical average value

chanhvinh.com

Dimensions			WS	Stroke	Spring load[1]				Art. No.
d_1	d_2	l		s	F_1 ~	F_2 ~	max.		
[mm]			[mm]	[mm]	[N]		[°C]	[g]	
M12	8.0	26	6.0	2.5	61.0	110.0	250	13.0	22030.0052
M16	10.0	33	8.0	3.5	68.0	142.0	250	32.0	22030.0056
M20	12.0	43	10.0	4.5	84.0	166.0	250	67.0	22030.0060
M24	15.0	48	12.0	5.5	127.0	237.0	250	106.0	22030.0064
stainless steel, standard spring load									
M 3	1.5	8	1.5	0.4	3.0	4.5	250	0.3	22030.0203
M 4	2.5	12	2.0	0.8	8.5	14.0	250	0.6	22030.0204
M 5	3.0	14	2.5	0.9	8.0	14.0	250	1.2	22030.0205
M 6	3.5	15	3.0	1.0	11.0	18.0	250	1.8	22030.0206
M 8	4.5	18	4.0	1.5	18.0	31.0	250	4.0	22030.0208
M10	6.0	23	5.0	2.0	24.0	45.0	250	8.0	22030.0210
M12	8.0	26	6.0	2.5	26.0	49.0	250	13.0	22030.0212
M16	10.0	33	8.0	3.5	41.0	86.0	250	32.0	22030.0216
M20	12.0	43	10.0	4.5	56.0	111.0	250	67.0	22030.0220
M24	15.0	48	12.0	5.5	81.0	151.0	250	107.0	22030.0224
stainless steel, heavy spring load									
M 3	1.5	8	1.5	0.4	5.0	9.0	250	0.3	22030.0243
M 4	2.5	12	2.0	0.8	12.0	18.0	250	0.6	22030.0244
M 5	3.0	14	2.5	0.9	15.0	22.0	250	1.2	22030.0245
M 6	3.5	15	3.0	1.0	19.0	28.0	250	1.8	22030.0246
M 8	4.5	18	4.0	1.5	36.0	62.0	250	4.0	22030.0248
M10	6.0	23	5.0	2.0	57.0	104.0	250	8.1	22030.0250
M12	8.0	26	6.0	2.5	61.0	110.0	250	13.0	22030.0252
M16	10.0	33	8.0	3.5	68.0	142.0	250	32.0	22030.0256
M20	12.0	43	10.0	4.5	84.0	166.0	250	67.0	22030.0260
M24	15.0	48	12.0	5.5	127.0	237.0	250	107.0	22030.0264

[1] statistical average value

Application example

CALCULATION OF THE INDEXING RESISTANCE

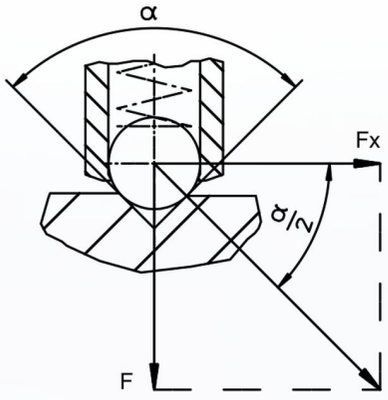

Sample calculation for:
α = 60°, Fx = 1,732 x F
α = 90°, Fx = F
α = 120°, Fx = 0,577 x F

$$Fx = \frac{F}{\tan \frac{\alpha}{2}}$$

chanhvinh.com

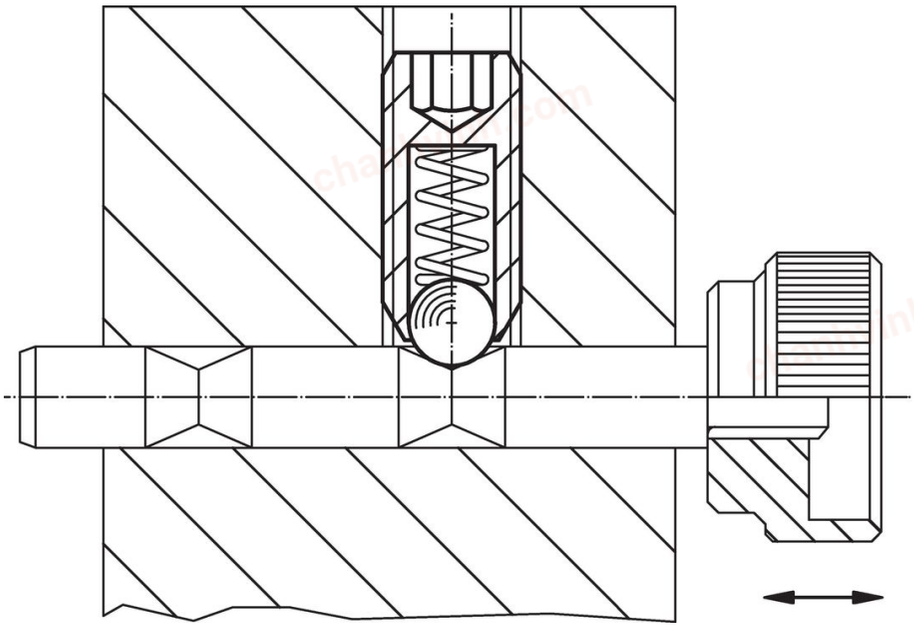

Compliance

For detailed compliance information please select the desired article number.

chanhvinh.com