chanhvinh.com

Locators • bolt-on, for spring plungers
EH 22020.

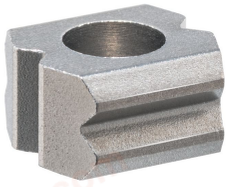

Product Description

Locators can be used as a counterpart for all spring plungers with ball. They enable the locking, detent and positioning of the respective workpiece.
These bolt-on locators have 90° notches on all four side surfaces (2x horizontal and 2x vertical to the mounting direction). Thanks to the hardened material, the locators are low-wear and particularly suitable for applications with many repeat cycles.

Material

- Sintered steel, case-hardened

Assembly

We recommend spring plungers with reinforced or heavy spring load. Please consider the insertion depth of the ball (dimension a) into the locator during installation.

Drawing

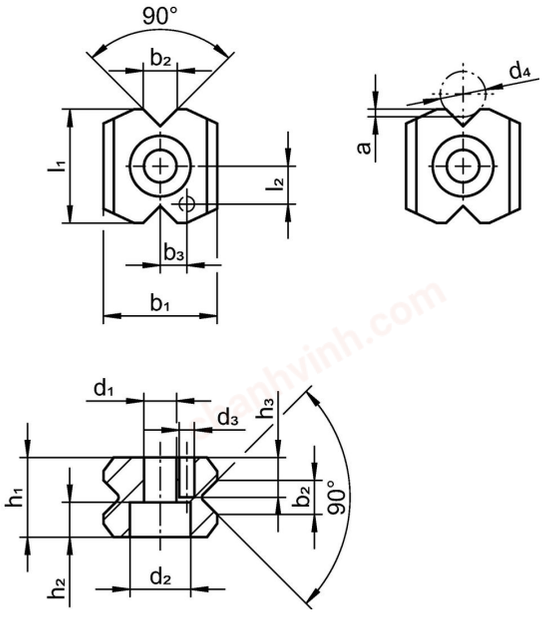

Order information

Dimensions													For cylinder screw DIN 912		Art. No.
b_2 ±0.1	d_1	d_2	d_3 H12	d_4	a	b_1	b_3 ±0.05	h_1	h_2	h_3	l_1	l_2 ±0.05			
[mm]													[mm]	[g]	
3.4	4.3	8	2	4.5 5.0	0.7	15	3.5	8.5	4.6	4	15	5	M4	8.6	22020.0130
4.5	4.3	8	2	6.0 6.5	1.0	15	3.5	10.5	4.6	4	15	5	M4	11.0	22020.0140

chanhvinh.com

Compliance

RoHS-compliant
Compliant with Directive 2011/65/EU [RoHS].

Does not contain SVHC substances
No SVHC substances with more than 0.1% w/w contained - SVHC list [REACH] as of 04.02.2026.

SCIP-code
N/A

Does not contain Proposition 65 substances
No Proposition 65 substances included.
https://www.P65Warnings.ca.gov/

Free from Conflict Minerals
This product does not contain any substances designated as "conflict minerals" such as tantalum, tin, gold or tungsten from the Democratic Republic of Congo or adjacent countries.

POP-compliant
Contains no persistent organic pollutants – Stockholm Convention [POP] as of September 2025.

PFAS-compliant
Contains no per- and polyfluoroalkyl substances (PFAS).

TSCA-compliant
Agent concentration in this product does not exceed the specified threshold.