chanhvinh.com

Connecting Elements • modular, mechanically operated
EH 1990.



Product Description

Material

Body
- Steel, case-hardened, ground

Control module
- Steel, blackened

More information

Further products

- Connecting Rings
- Coverings, for connecting elements

Drawing

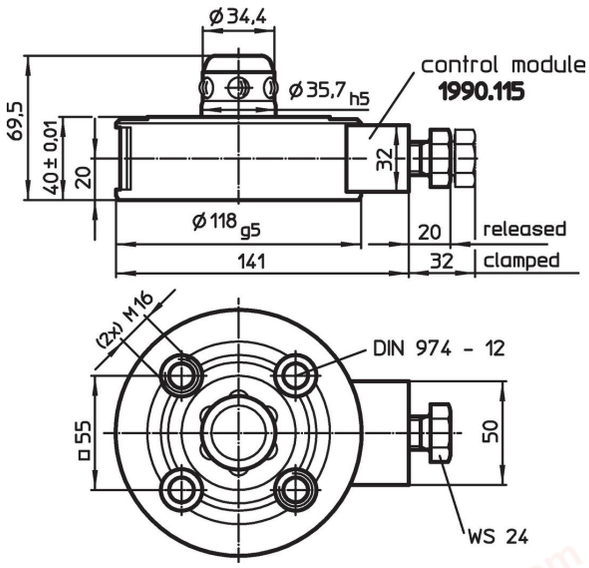

Order information

Holding force [N]	Centering accuracy < [mm]	Release moment [Nm]	[kg]	Art. No.
10000	0.01	10	3.6	1990.100

Application example

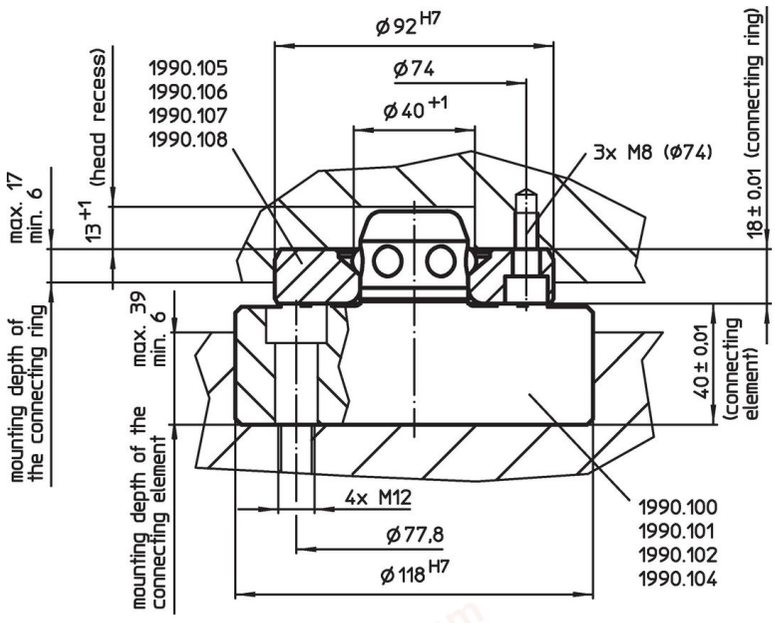

chanhvinh.com

Compliance

RoHS-compliant
Compliant with Directive 2011/65/EU [RoHS].

Does not contain SVHC substances
No SVHC substances with more than 0.1% w/w contained - SVHC list [REACH] as of 04.02.2026.

SCIP-code
N/A

Does not contain Proposition 65 substances
No Proposition 65 substances included.
https://www.P65Warnings.ca.gov/

Free from Conflict Minerals
This product does not contain any substances designated as "conflict minerals" such as tantalum, tin, gold or tungsten from the Democratic Republic of Congo or adjacent countries.

POP-compliant
Contains no persistent organic pollutants – Stockholm Convention [POP] as of September 2025.

PFAS-compliant
Contains no per- and polyfluoroalkyl substances (PFAS).

TSCA-compliant
Agent concentration in this product does not exceed the specified threshold.