chanhvinh.com



# **Supporting Plates** · with 4 connecting rings
## EH 1990.

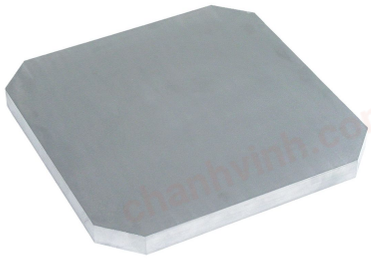

## Product Description

### Material

**Connecting rings**
- Steel, case-hardened, ground

**Base plate**
- Aluminium Al

**More information**

### Notes

Customized design on request.

## Drawing

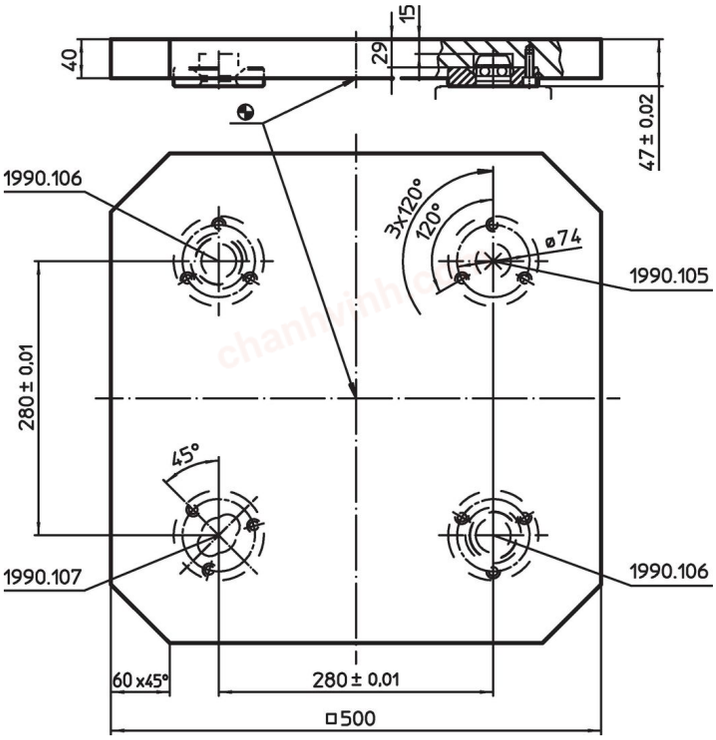


## Order information

| [kg] | Art. No. |
|---|---|
| 27 | 1990.192 |

chanhvinh.com



## Application example

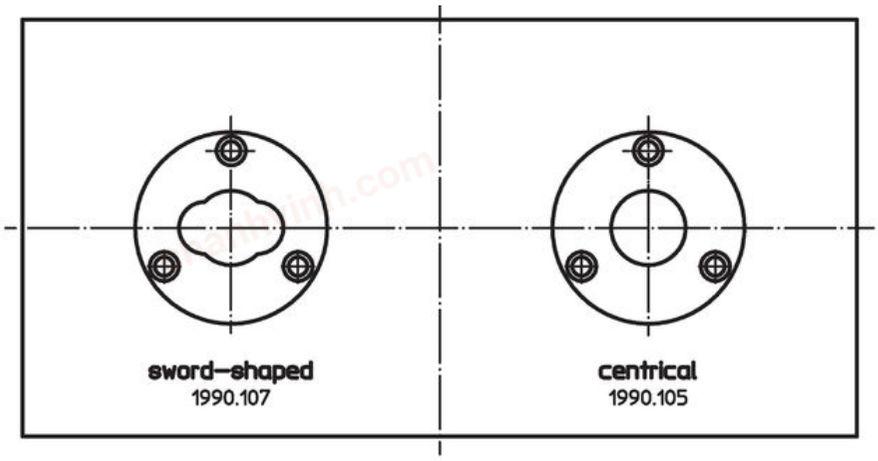


Assembly position of connecting rings independent from distance

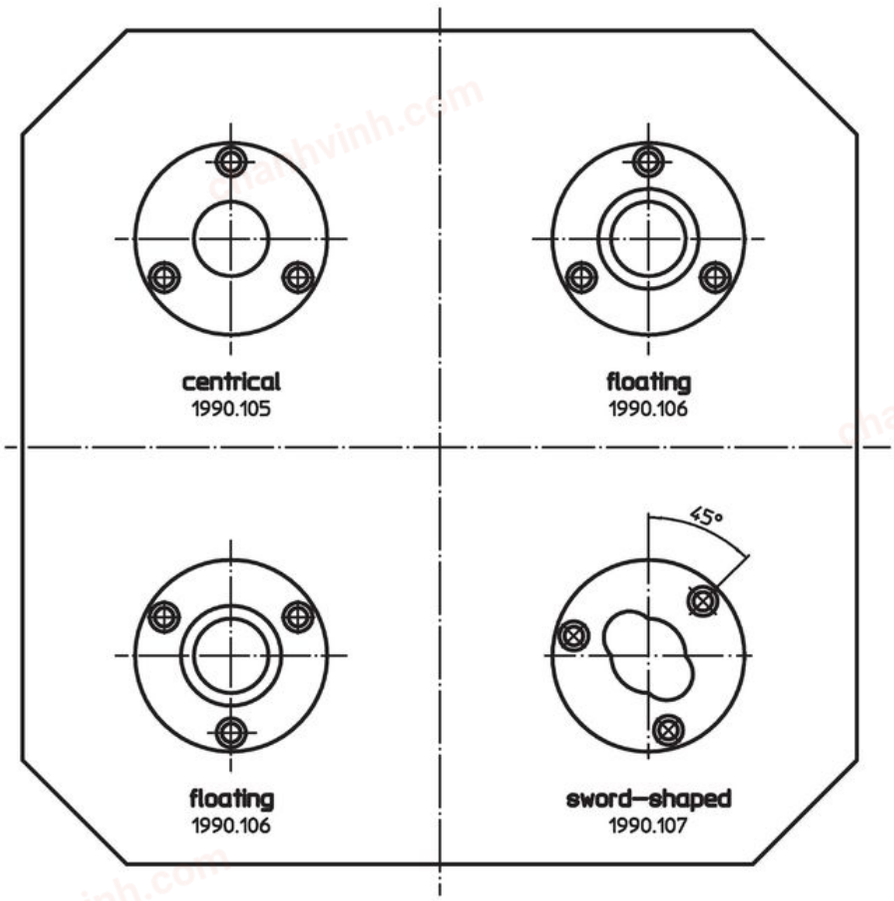

chanhvinh.com



## Compliance

### RoHS-compliant
Compliant with Directive 2011/65/EU [RoHS].

### Does not contain SVHC substances
No SVHC substances with more than 0.1% w/w contained - SVHC list [REACH] as of 04.02.2026.

### SCIP-code
N/A

### Does not contain Proposition 65 substances
No Proposition 65 substances included.
https://www.P65Warnings.ca.gov/

### Free from Conflict Minerals
This product does not contain any substances designated as "conflict minerals" such as tantalum, tin, gold or tungsten from the Democratic Republic of Congo or adjacent countries.

### POP-compliant
Contains no persistent organic pollutants – Stockholm Convention [POP] as of September 2025.

### PFAS-compliant
Contains no per- and polyfluoroalkyl substances (PFAS).

### TSCA-compliant
Agent concentration in this product does not exceed the specified threshold.