chanhvinh.com

Connecting Elements • hydraulically operated, single acting with lifting-off
EH 1990.



Product Description

The zero-point clamping system for clamping and simultaneous centring of fixture elements is designed as a quick-change system to reduce set-up times. It enables referenced clamping of fixture elements through repeatable positioning at the ‘zero-point’.
In addition to the highest possible flexibility of a zero-point clamping system, this technology guarantees high production reliability, long-lasting accuracy and the prevention of contamination at the reference point thanks to the upward-mounted pin of the base element (connecting element) and the connecting ring integrated into the fixture.
These connecting elements are characterised by the following features:

- 20 kN holding force
- Clamping and and centring via spring force.
- Releasing and lifting with integrated lifting cylinder, hydraulic.
- Suitable for automation.
- Can be integrated into base plates, angles, cubes, etc.

Material

- Steel, case-hardened, ground

More information

Further products

- Connecting Rings
- Coverings, for connecting elements

chanhvinh.com

Drawing

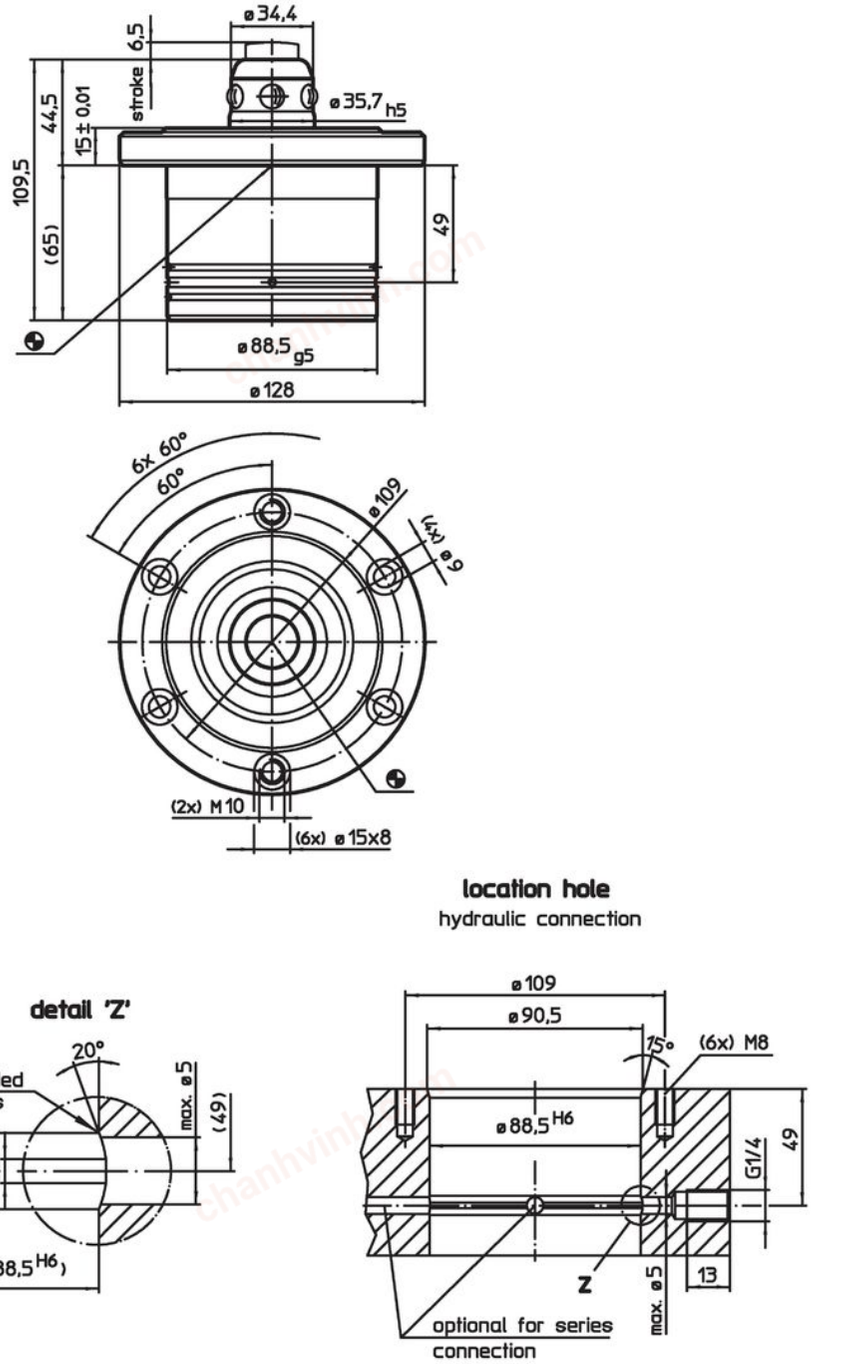

Order information

Holding force [N]	Centering accuracy < [mm]	Release pressure max. [bar]	[kg]	Art. No.
20000	0.01	60 – 80	4.1	1990.080

chanhvinh.com

Application example



Compliance

RoHS-compliant
Compliant with Directive 2011/65/EU [RoHS].

Does not contain SVHC substances
No SVHC substances with more than 0.1% w/w contained - SVHC list [REACH] as of 04.02.2026.

SCIP-code
N/A

Does not contain Proposition 65 substances
No Proposition 65 substances included.
https://www.P65Warnings.ca.gov/

Free from Conflict Minerals
This product does not contain any substances designated as "conflict minerals" such as tantalum, tin, gold or tungsten from the Democratic Republic of Congo or adjacent countries.

POP-compliant
Contains no persistent organic pollutants – Stockholm Convention [POP] as of September 2025.

PFAS-compliant
Contains no per- and polyfluoroalkyl substances (PFAS).

TSCA-compliant
Agent concentration in this product does not exceed the specified threshold.