chanhvinh.com

Base Plates • with 4 double acting connecting elements
EH 1990.



Product Description

Material

Connecting element
- Steel, case-hardened, ground

Base plate
- Aluminium Al

More information

Notes

Customized design on request.

Further products

- Connecting Elements, hydraulically operated, double acting, with lifting-off and blow-out
- Supporting Plates, with 4 connecting rings

Drawing

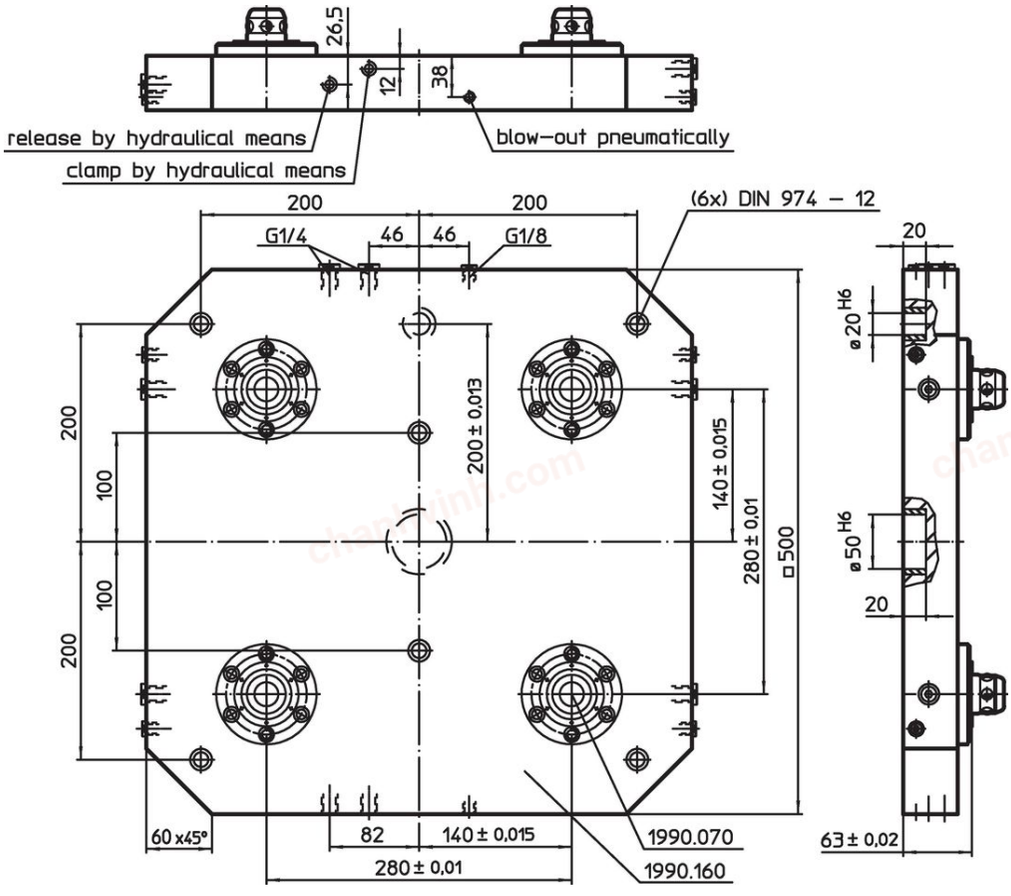

Order information

[kg]	Art. No.
35	1990.165

chanhvinh.com

Application example

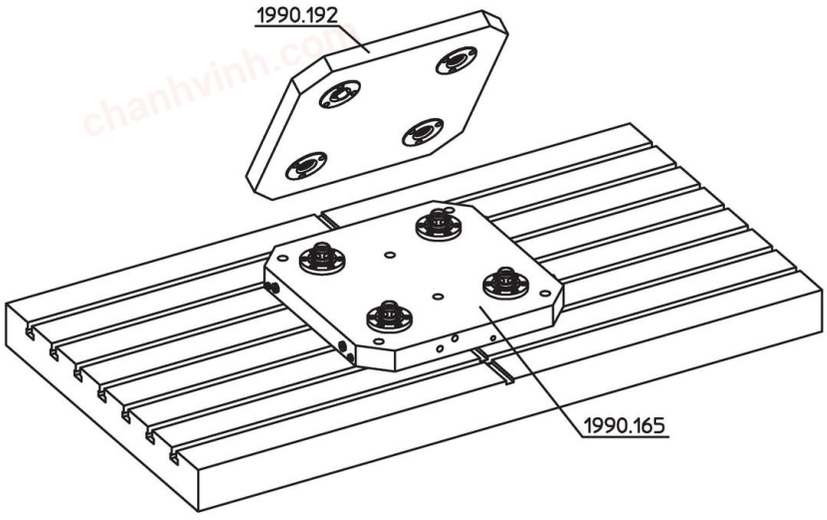

Compliance

RoHS-compliant
Contains lead – Compliant with Exemption 6(a)-I.

Contains SVHC substances >0,1% w/w
Contains lead - SVHC list [REACH] as of 04.02.2026.

SCIP-code
N/A

Contains Proposition 65 substances
Lead can lead to cancer, developmental disorders, and reproductive damage in men and to reproductive damage in women from exposure. https://www.P65Warnings.ca.gov/

Free from Conflict Minerals
This product does not contain any substances designated as "conflict minerals" such as tantalum, tin, gold or tungsten from the Democratic Republic of Congo or adjacent countries.

POP-compliant
Contains no persistent organic pollutants – Stockholm Convention [POP] as of September 2025.

PFAS-compliant
Contains no per- and polyfluoroalkyl substances (PFAS).

TSCA-compliant
Agent concentration in this product does not exceed the specified threshold.