chanhvinh.com

Clamping Angles • semi-finished
EH 1906.



Product Description

This product group will be removed from the range effective 31 December 2026.
Take advantage of our clearance sale and purchase these items at attractive sales prices.
Sold while supply lasts. Subject to prior sale.

Material

- Grey cast iron GG

More information

Notes

Special plates on request.
This is a discontinued article.

Further products

- Threaded Lifting Pins, self-locking

Drawing

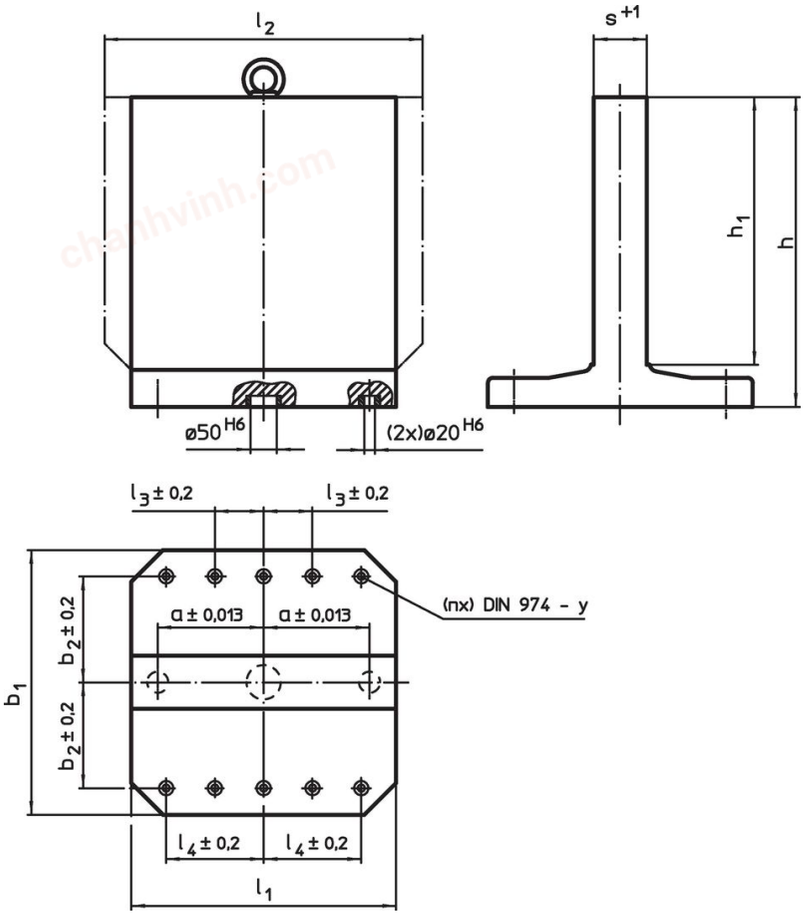

Order information

b_1 x l_1	l_2	h_1	h	a ±0.013	b_2 ±0.2	l_3 ±0.2	l_4 ±0.2	s +1	y	For screws	Number of fastening holes n		Art. No.
				[mm]					[mm]	[mm]		[kg]	
Grey cast iron GG													
400 x 400	–	400	475	150	150	–	150	81	12	M12	4	150	1906.210
400 x 400	500	400	475	150	150	–	150	81	12	M12	4	173	1906.310
500 x 500	–	500	595	200	200	–	200	101	12	M12	6	284	1906.410
500 x 500	630	500	595	200	200	–	200	101	12	M12	6	334	1906.510
630 x 630	–	630	725	200	200	–	200	131	16	M16	6	455	1906.610
800 x 800	–	800	910	300	300	100	300	151	16	M16	8	805	1906.810

chanhvinh.com

Application example

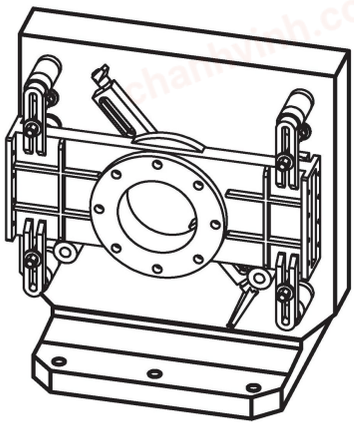

Compliance

For detailed compliance information please select the desired article number.