chanhvinh.com

Supports for Clamping Bar

EH 1586.



Product Description

Material

- Tool steel, hardened

Drawing

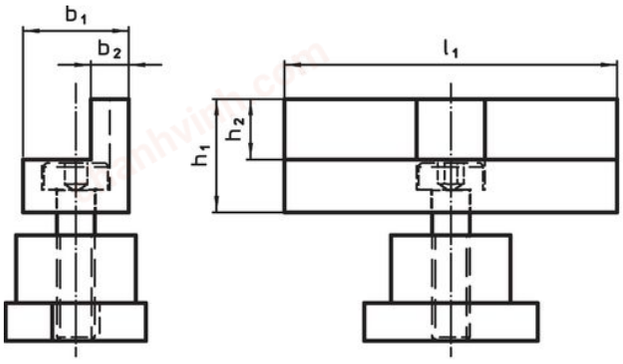

picture 1

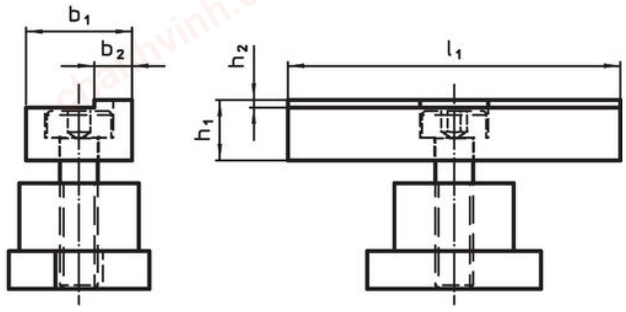

picture 2

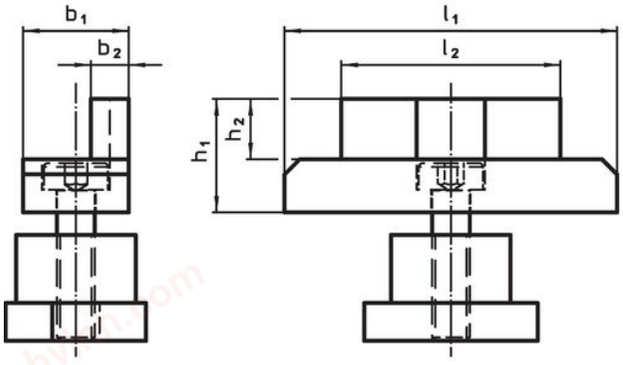

picture 3

Order information

Dimensions							Art. No.
l_1	l_2	b_1	b_2	h_1 ±0.01	h_2		
[mm]						[g]	
high – picture 1							
44	–	14	5	15	8	72	1586.200
low – picture 2							
44	–	14	5	8	1	60	1586.202
high, width shortened – picture 3							
44	29	14	5	15	8	64	1586.201

chanhvinh.com

Compliance

RoHS-compliant
Compliant with Directive 2011/65/EU [RoHS].

Does not contain SVHC substances
No SVHC substances with more than 0.1% w/w contained - SVHC list [REACH] as of 04.02.2026.

SCIP-code
N/A

Does not contain Proposition 65 substances
No Proposition 65 substances included.
https://www.P65Warnings.ca.gov/

Free from Conflict Minerals
This product does not contain any substances designated as "conflict minerals" such as tantalum, tin, gold or tungsten from the Democratic Republic of Congo or adjacent countries.

POP-compliant
Contains no persistent organic pollutants – Stockholm Convention [POP] as of September 2025.

PFAS-compliant
Contains no per- and polyfluoroalkyl substances (PFAS).

TSCA-compliant
Agent concentration in this product does not exceed the specified threshold.