chanhvinh.com

Stops • with mounting thread
EH 1586.



Product Description

Material

Inserts
- Hard metal

Body
- Tool steel, hardened

Drawing

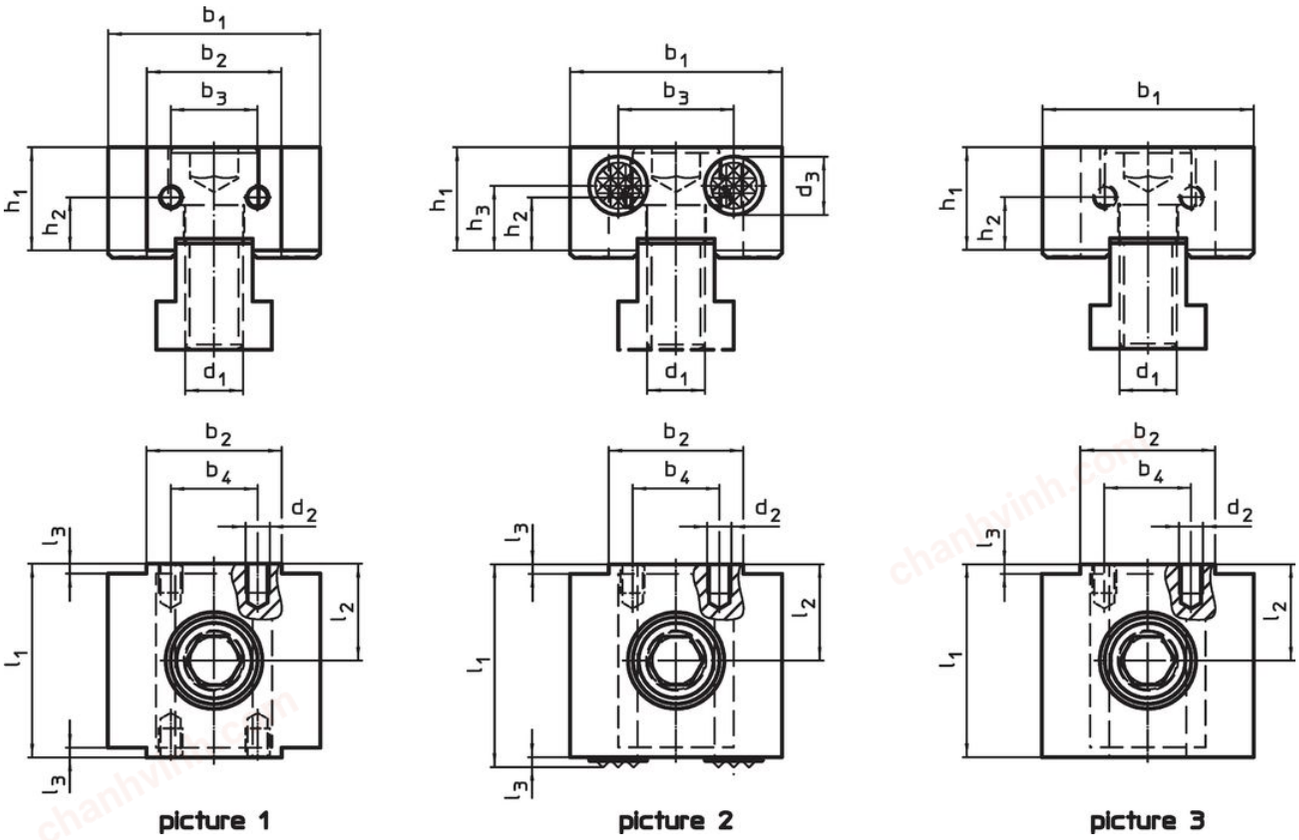

picture 1 picture 2 picture 3

Order information

Dimensions														Art. No.
d_1	d_2	d_3	l_1	l_2 ±0.01	l_3	b_1 -0.05	b_2 -0.05	b_3	b_4	h_1	h_2	h_3	[g]	
					[mm]									
mounting thread on both sides – picture 1														
M12	M5	–	40	20	2	44	28	18	18	21.4	11	11.0	379	1586.080
ribbed and mounting thread – picture 2														
M12	M5	12	42	20	2	44	28	24	18	21.4	11	13.4	397	1586.081
plain and mounting thread – picture 3														
M12	M5	–	40	20	2	44	28	–	18	21.4	11	–	397	1586.082

chanhvinh.com

Compliance

RoHS-compliant
Compliant with Directive 2011/65/EU [RoHS].

Does not contain SVHC substances
No SVHC substances with more than 0.1% w/w contained - SVHC list [REACH] as of 04.02.2026.

SCIP-code
N/A

Does not contain Proposition 65 substances
No Proposition 65 substances included.
https://www.P65Warnings.ca.gov/

Free from Conflict Minerals
This product does not contain any substances designated as "conflict minerals" such as tantalum, tin, gold or tungsten from the Democratic Republic of Congo or adjacent countries.

POP-compliant
Contains no persistent organic pollutants – Stockholm Convention [POP] as of September 2025.

PFAS-compliant
Contains no per- and polyfluoroalkyl substances (PFAS).

TSCA-compliant
Agent concentration in this product does not exceed the specified threshold.