chanhvinh.com

Stops • plain
EH 1586.



Product Description

Material

Inserts
- Hard metal

Body
- Tool steel, hardened

Drawing

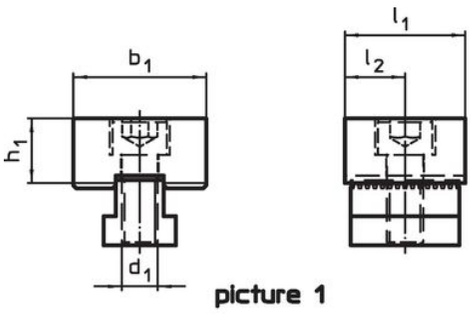

picture 1

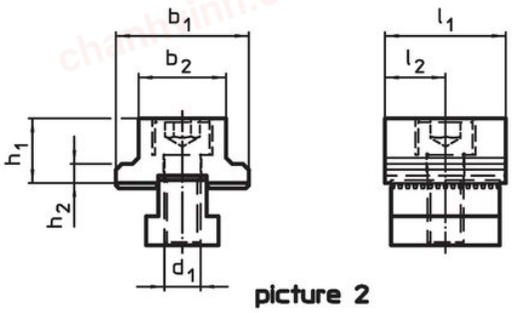

picture 2

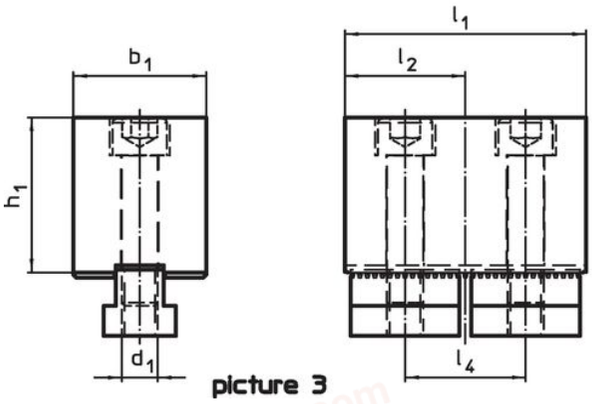

picture 3

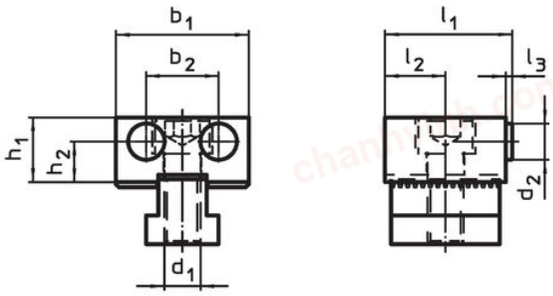

picture 4

Order information

Dimensions [mm]											Art. No.
d_1	d_2	l_1	l_2	l_3	l_4	b_1	b_2	h_1	h_2		
plain, on both sides – picture 1											
M12	–	40	20±0.01	–	–	44-0.05	–	21.4	–	395.0 g	1586.070
plain, two-sided / width shortened – picture 2											
M12	–	40	20±0.01	–	–	44	29	21.4	6.4	324.0 g	1586.071
plain, two-sided / high version – picture 3											
M12	–	80	40	–	40	44-0.10	–	51.4	–	1.6 kg	1586.072
ribbed and plain – picture 4											
M12	12	42	20±0.01	2	–	44-0.05	24	21.4	13.4	407.0 g	1586.073

chanhvinh.com

Compliance

RoHS-compliant
Compliant with Directive 2011/65/EU [RoHS].

Does not contain SVHC substances
No SVHC substances with more than 0.1% w/w contained - SVHC list [REACH] as of 04.02.2026.

SCIP-code
N/A

Does not contain Proposition 65 substances
No Proposition 65 substances included.
https://www.P65Warnings.ca.gov/

Free from Conflict Minerals
This product does not contain any substances designated as "conflict minerals" such as tantalum, tin, gold or tungsten from the Democratic Republic of Congo or adjacent countries.

POP-compliant
Contains no persistent organic pollutants – Stockholm Convention [POP] as of September 2025.

PFAS-compliant
Contains no per- and polyfluoroalkyl substances (PFAS).

TSCA-compliant
Agent concentration in this product does not exceed the specified threshold.