chanhvinh.com

Clamping Heads

EH 1514.700 - EH 1614.700



Product Description

This product group will be removed from the range effective 31 December 2026.
Take advantage of our clearance sale and purchase these items at attractive sales prices.
Sold while supply lasts. Subject to prior sale.

Material

- Steel, blackened

Drawing

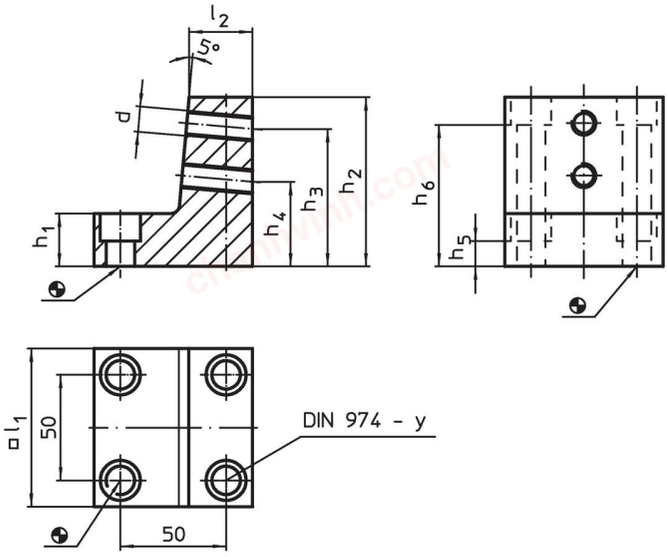

Order information

System	Dimensions									y	For screws		Art. No.
	l_1	l_2	h_1	h_2	h_3	h_4	h_5	h_6	d				
	[mm]									[mm]	[mm]	[kg]	
L12	74.8	30	25	80	65	40	12.0	67.0	M12	12	M12	1.8	1514.700
L16	90.0	35	30	90	75	50	12.5	72.5	M16	16	M16	2.8	1614.700

Application example

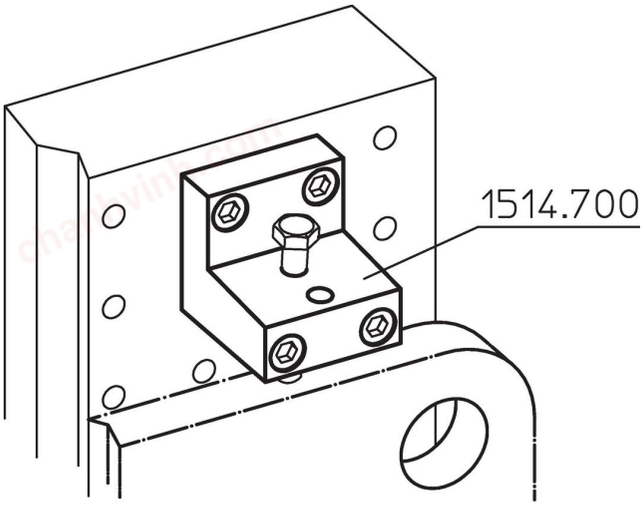

chanhvinh.com

Compliance

RoHS-compliant
Compliant with Directive 2011/65/EU [RoHS].

Does not contain SVHC substances
No SVHC substances with more than 0.1% w/w contained - SVHC list [REACH] as of 04.02.2026.

SCIP-code
N/A

Does not contain Proposition 65 substances
No Proposition 65 substances included.
https://www.P65Warnings.ca.gov/

Free from Conflict Minerals
This product does not contain any substances designated as "conflict minerals" such as tantalum, tin, gold or tungsten from the Democratic Republic of Congo or adjacent countries.

POP-compliant
Contains no persistent organic pollutants – Stockholm Convention [POP] as of September 2025.

PFAS-compliant
Contains no per- and polyfluoroalkyl substances (PFAS).

TSCA-compliant
Agent concentration in this product does not exceed the specified threshold.