chanhvinh.com

Clamping Angles

EH 1505.200 - EH 1605.400



Product Description

This product group will be removed from the range effective 31 December 2026.
Take advantage of our clearance sale and purchase these items at attractive sales prices.
Sold while supply lasts. Subject to prior sale.

Material

- Grey cast iron, phosphatized

Drawing

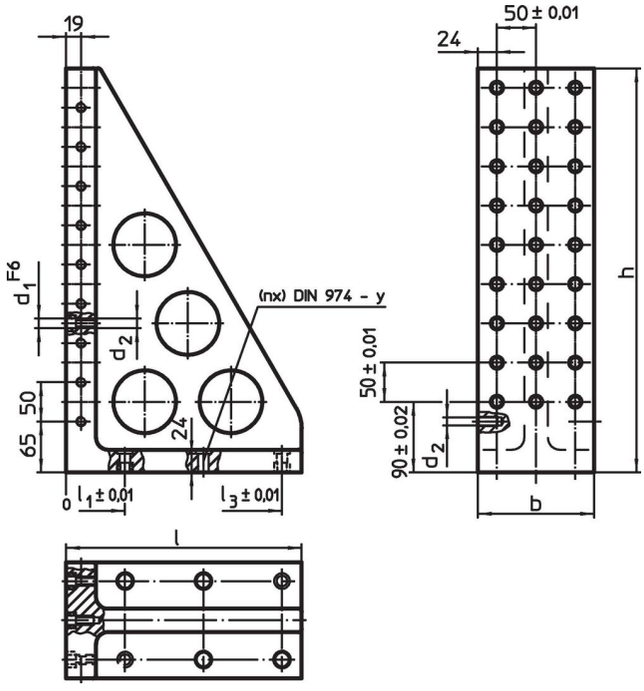

chanhvinh.com

Order information

System	Dimensions								y	For screws	Number of fastening holes n	Number of hole rows		Art. No.
	l	b	h	l_1	l_2	l_3	d_1	d_2						
	[mm]								[mm]	[mm]			[kg]	
L12	230	98	415	75	175	–	12	M12	12	M12	4	2 x 7	19	1505.200
L12	300	148	515	75	175	275	12	M12	12	M12	6	3 x 9	39	1505.400
L16	230	98	415	75	175	–	16	M16	16	M16	4	2 x 7	19	1605.200
L16	300	148	515	75	175	275	16	M16	16	M16	6	3 x 9	38	1605.400

Application example

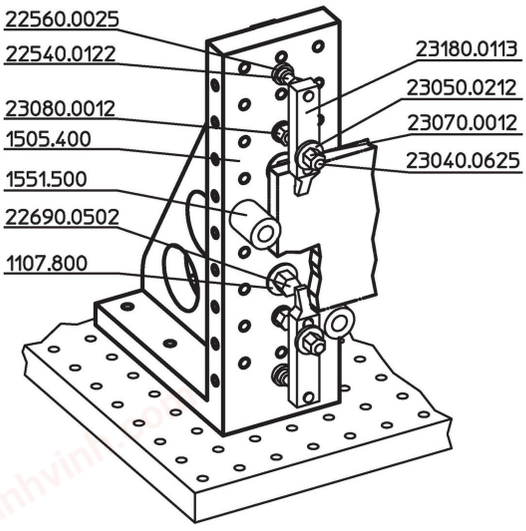

Compliance

RoHS-compliant
Compliant with Directive 2011/65/EU [RoHS].

Does not contain SVHC substances
No SVHC substances with more than 0.1% w/w contained - SVHC list [REACH] as of 04.02.2026.

SCIP-code
N/A

Does not contain Proposition 65 substances
No Proposition 65 substances included.
https://www.P65Warnings.ca.gov/

Free from Conflict Minerals
This product does not contain any substances designated as "conflict minerals" such as tantalum, tin, gold or tungsten from the Democratic Republic of Congo or adjacent countries.

POP-compliant
Contains no persistent organic pollutants – Stockholm Convention [POP] as of September 2025.

PFAS-compliant
Contains no per- and polyfluoroalkyl substances (PFAS).

TSCA-compliant
Agent concentration in this product does not exceed the specified threshold.