chanhvinh.com

Base Plates • V70eco, suitable for pallets DIN 55201

EH 1200.700 - EH 1203.500



Product Description

V70eco base plates are a further development of the established V70 product line, optimized in quality and price.
They are fully compatible with the existing V70 T-slot System. Several alignment options are already included in the standard version.
This product group will be removed from the range effective 31 December 2026.
Take advantage of our clearance sale and purchase these items at attractive sales prices.
Sold while supply lasts. Subject to prior sale.

- Locating holes in quality H6 and slots in quality H8.
- Alignment of the base plate on the machine table by means of locating holes and/or centering slot.
- Fastening holes on a 100 mm pitch.
- High-strength tool steel.

Available options (delivery time approx. 10 working days):
a) Additional mounting holes on a 63 mm pitch
b) Additional mounting holes on a 125 mm pitch
c) Exterior stop
d) With connecting rings for Halder Zero-Point Clamping System

Material

- Tool steel, high-strength

More information

Notes

Customized design on request.
This is a discontinued article.

Drawing

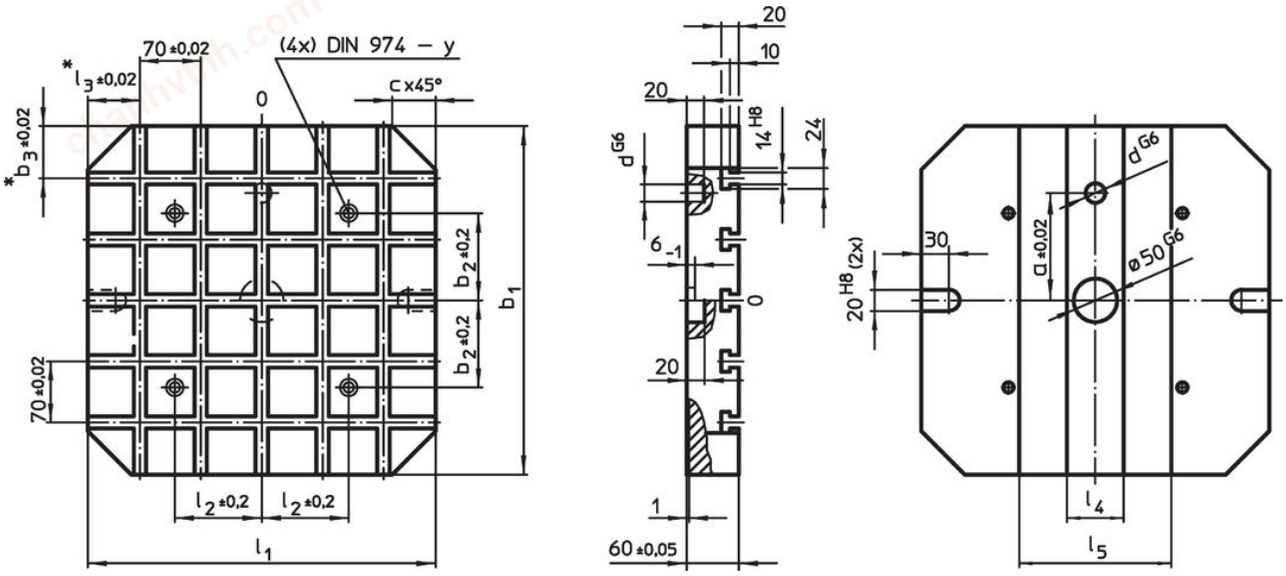

* These tolerances are valid only for optional exterior stop type.

Order information

System	Dimensions												Number of connecting rings Zero-Point Clamping System (optional)	Number of T-slots		Art. No.
	l_1	b_1	a ±0.02	b_2 ±0.2	b_3 ±0.02	c	d G6	l_2 ±0.2	l_3 ±0.02	l_4	l_5	y				
	[mm]														[kg]	
V70	400	400	150	100	60	50	20	100	–	65	175	12	4	5 x 5	61	1200.700
V70	500	500	200	200	40	60	20	200	–	70	310	12	4	7 x 7	95	1200.800
V70	630	630	200	200	35	70	25	200	–	70	340	16	4	9 x 9	150	1200.900
V70	500	400	150	100	60	50	20	200	40	70	310	12	4	5 x 7	77	1203.300
V70	630	500	200	200	40	60	20	200	35	70	340	12	4	7 x 9	120	1203.500

chanhvinh.com

Compliance

RoHS-compliant
Compliant with Directive 2011/65/EU [RoHS].

Does not contain SVHC substances
No SVHC substances with more than 0.1% w/w contained - SVHC list [REACH] as of 04.02.2026.

SCIP-code
N/A

Does not contain Proposition 65 substances
No Proposition 65 substances included.
https://www.P65Warnings.ca.gov/

Free from Conflict Minerals
This product does not contain any substances designated as "conflict minerals" such as tantalum, tin, gold or tungsten from the Democratic Republic of Congo or adjacent countries.

POP-compliant
Contains no persistent organic pollutants – Stockholm Convention [POP] as of September 2025.

PFAS-compliant
Contains no per- and polyfluoroalkyl substances (PFAS).

TSCA-compliant
Agent concentration in this product does not exceed the specified threshold.