chanhvinh.com

Stops • cylindrical
EH 1115.100



Product Description

This product group will be removed from the range effective 31 December 2026.
Take advantage of our clearance sale and purchase these items at attractive sales prices.
Sold while supply lasts. Subject to prior sale.

Material

- Steel, case-hardened, ground

Drawing

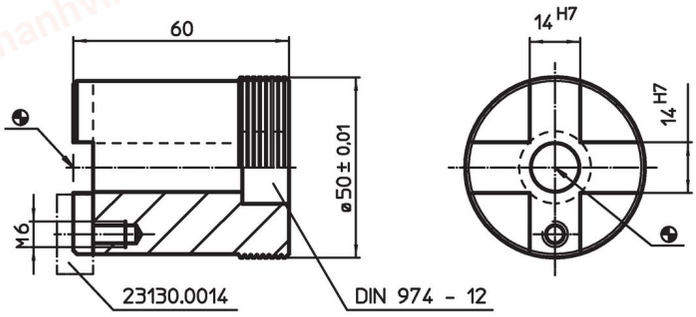

Order information

System	[g]	Art. No.
V70	758	1115.100

Compliance

RoHS-compliant
Compliant with Directive 2011/65/EU [RoHS].

Does not contain SVHC substances
No SVHC substances with more than 0.1% w/w contained - SVHC list [REACH] as of 04.02.2026.

SCIP-code
N/A

Does not contain Proposition 65 substances
No Proposition 65 substances included.
https://www.P65Warnings.ca.gov/

Free from Conflict Minerals
This product does not contain any substances designated as "conflict minerals" such as tantalum, tin, gold or tungsten from the Democratic Republic of Congo or adjacent countries.

POP-compliant
Contains no persistent organic pollutants – Stockholm Convention [POP] as of September 2025.

PFAS-compliant
Contains no per- and polyfluoroalkyl substances (PFAS).

TSCA-compliant
Agent concentration in this product does not exceed the specified threshold.