chanhvinh.com

V-Blocks

EH 1048.200 - EH 1148.300



Product Description

This product group will be removed from the range effective 31 December 2026.
Take advantage of our clearance sale and purchase these items at attractive sales prices.
Sold while supply lasts. Subject to prior sale.

Material

- Steel, case-hardened, ground

Drawing

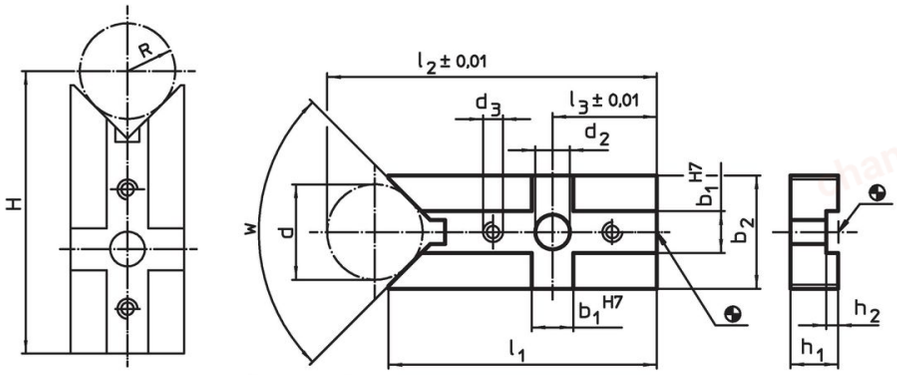

H = (R*1,414) + 49,497 [1048.200]
H = (R*1,414) + 48,996 [1048.300]
H = (R*1,155) + 77,025 [1148.000]
H = (R*1,155) + 81,204 [1148.100]
H = (R*1,414) + 72,872 [1148.200]
H = (R*1,414) + 73,159 [1148.300]

Order information

System	Dimensions												w		Art. No.
	b_1	d	b_2	d_2	d_3	l_1	l_2	l_3	h_1	h_2	d min.	d max.			
	[mm]													[g]	
V40	10	20	25	6.6	M4	60	73.64	20	10	2.6	8	25	90°	90	1048.200
V40	10	30	38	6.6	M4	66	85.21	20	10	2.6	8	44	90°	155	1048.300
V70	14	32	38	13.0	M6	87	111.50	35	16	4.0	18	66	120°	331	1148.000
V70	14	62	68	13.0	M6	100	148.00	35	16	4.0	18	126	120°	694	1148.100
V70	14	32	38	13.0	M6	90	111.50	35	16	4.0	14	44	90°	328	1148.200
V70	14	62	68	13.0	M6	104	148.00	35	16	4.0	14	83	90°	690	1148.300

Application example

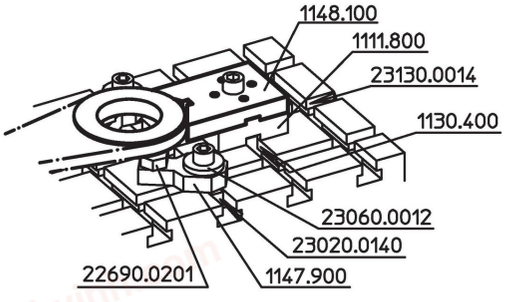

chanhvinh.com

Compliance

RoHS-compliant
Compliant with Directive 2011/65/EU [RoHS].

Does not contain SVHC substances
No SVHC substances with more than 0.1% w/w contained - SVHC list [REACH] as of 04.02.2026.

SCIP-code
N/A

Does not contain Proposition 65 substances
No Proposition 65 substances included.
https://www.P65Warnings.ca.gov/

Free from Conflict Minerals
This product does not contain any substances designated as "conflict minerals" such as tantalum, tin, gold or tungsten from the Democratic Republic of Congo or adjacent countries.

POP-compliant
Contains no persistent organic pollutants – Stockholm Convention [POP] as of September 2025.

PFAS-compliant
Contains no per- and polyfluoroalkyl substances (PFAS).

TSCA-compliant
Agent concentration in this product does not exceed the specified threshold.