chanhvinh.com

T-Clamping Blocks

EH 1031.100 - EH 1131.200



Product Description

Articles of the V40 system of this product group will be removed from the range effective 31 December 2026.
Take advantage of our clearance sale and purchase these items at attractive sales prices.
Sold while supply lasts. Subject to prior sale.

Material

- Steel, case-hardened, ground

More information

Further products

- Wrenches

Drawing

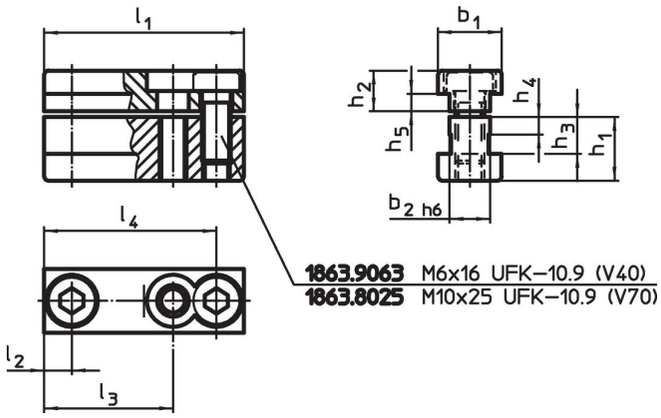

Order information

System	Dimensions [mm]												Art. No.
	l_1	l_2	l_3	l_4	b_1	b_2	h_1	h_2	h_3	h_4	h_5	[g]	
V40	39.6	6.6	–	32.6	15	10	13.5	7.5	8.5	4	3.5	69	1031.100
V40	13.0	6.5	–	–	15	10	13.5	7.5	8.5	4	3.5	23	1031.200
V40	24.0	12.0	–	–	15	10	13.5	7.5	8.5	4	3.5	43	1031.300
V70	69.0	9.5	44.5	59.5	22	14	22.0	14.0	12.7	6	6.0	291	1131.100
V70	22.0	11.0	–	–	22	14	22.0	14.0	12.7	6	6.0	97	1131.200

chanhvinh.com

Compliance

RoHS-compliant
Compliant with Directive 2011/65/EU [RoHS].

Does not contain SVHC substances
No SVHC substances with more than 0.1% w/w contained - SVHC list [REACH] as of 04.02.2026.

SCIP-code
N/A

Does not contain Proposition 65 substances
No Proposition 65 substances included.
https://www.P65Warnings.ca.gov/

Free from Conflict Minerals
This product does not contain any substances designated as "conflict minerals" such as tantalum, tin, gold or tungsten from the Democratic Republic of Congo or adjacent countries.

POP-compliant
Contains no persistent organic pollutants – Stockholm Convention [POP] as of September 2025.

PFAS-compliant
Contains no per- and polyfluoroalkyl substances (PFAS).

TSCA-compliant
Agent concentration in this product does not exceed the specified threshold.