chanhvinh.com

Stops

EH 1014.500 - EH 1114.500



Product Description

Material

- Steel, blackened

Drawing

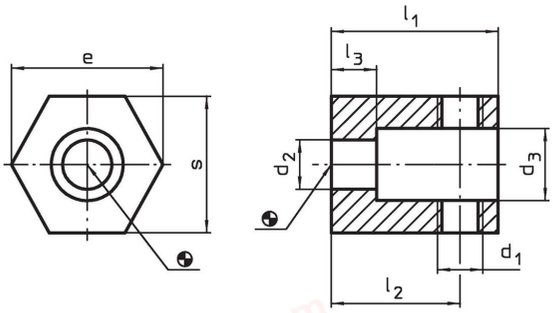

Order information

System	Dimensions									Art. No.
	d_1	d_2	d_3	l_1	l_2	l_3	s	e	[g]	
	[mm]									
V40	M 8	8.4	14	26	20	8	22	25.4	55	1014.500
V70/L12	M12	13.0	19	44	34	12	36	40.0	283	1114.500

Compliance

RoHS-compliant
Compliant with Directive 2011/65/EU [RoHS].

Does not contain SVHC substances
No SVHC substances with more than 0.1% w/w contained - SVHC list [REACH] as of 04.02.2026.

SCIP-code
N/A

Does not contain Proposition 65 substances
No Proposition 65 substances included.
https://www.P65Warnings.ca.gov/

Free from Conflict Minerals
This product does not contain any substances designated as "conflict minerals" such as tantalum, tin, gold or tungsten from the Democratic Republic of Congo or adjacent countries.

POP-compliant
Contains no persistent organic pollutants – Stockholm Convention [POP] as of September 2025.

PFAS-compliant
Contains no per- and polyfluoroalkyl substances (PFAS).

TSCA-compliant
Agent concentration in this product does not exceed the specified threshold.