chanhvinh.com

SERIES 30
Snap-in Panel Mounting

FEATURES
- Convenient Snap-in Panel Mounting
- Choice of 6 Button Colors
- SPST (Momentary Contact)
- Gold Plated Contacts
- Sealed
- Butt Contact System



DIMENSIONS In inches (and millimeters)

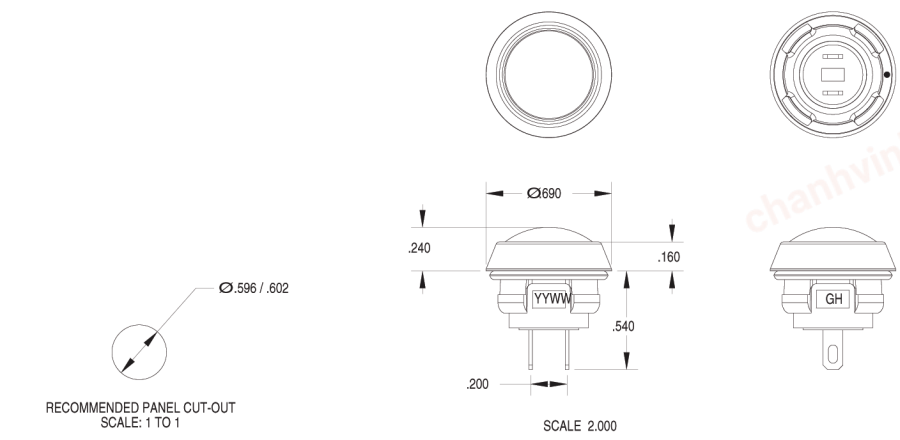

(Unless otherwise noted, standard tolerances are +/- .020)

MATERIAL
- Button, Housing, Base and Plunger: Nylon, 45% Glass-filled
- Terminal: Brass, gold-plated over nickel
- Shorting Bar: Brass, gold-plated over nickel
- Internal Seal: Silicone Rubber
- O-ring Seal: Silicone
- Spring: Tinned music wire
- Travel: .090 Nominal
- Travel Before Make: .035 Nominal

RATINGS
- Cycles: 500,000 Actuations
- Operating Temperature: -40° C to +80° C
- Shock: 100 G's/ 6 Milliseconds
- Rating at 24 VDC: 150 Milliamps
- Voltage Breakdown: 1000 Vac between mutually insulated parts
- Contact Resistance: 25 megaohms max on new switch
- Insulation: 1,000 megaohms minimum

ORDERING INFORMATION

Part Number	Description
30-100	Black
30-101	Red
30-102	Green
30-103	Yellow
30-104	Orange
30-105	Blue

CIRCUITRY

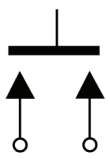

SPST N.O.